NOTES
■ FOR COMPLETE DESIGN AND PRODUCT INFORMATION CONTACT JENSEN PRECAST.

BILL OF MATERIALS

ITEM	QTY	PART NUMBER	DESCRIPTION
1	10.795 ft^3	100011425	CONCRETE MIX GENERIC 5000 PSI
2	1	200019471	REINFORCING MAT 200019471
3	3	100004878	ANCHOR UTILITY .671DIA 5-SLAB GALV P75 5UA671

100017287.idw

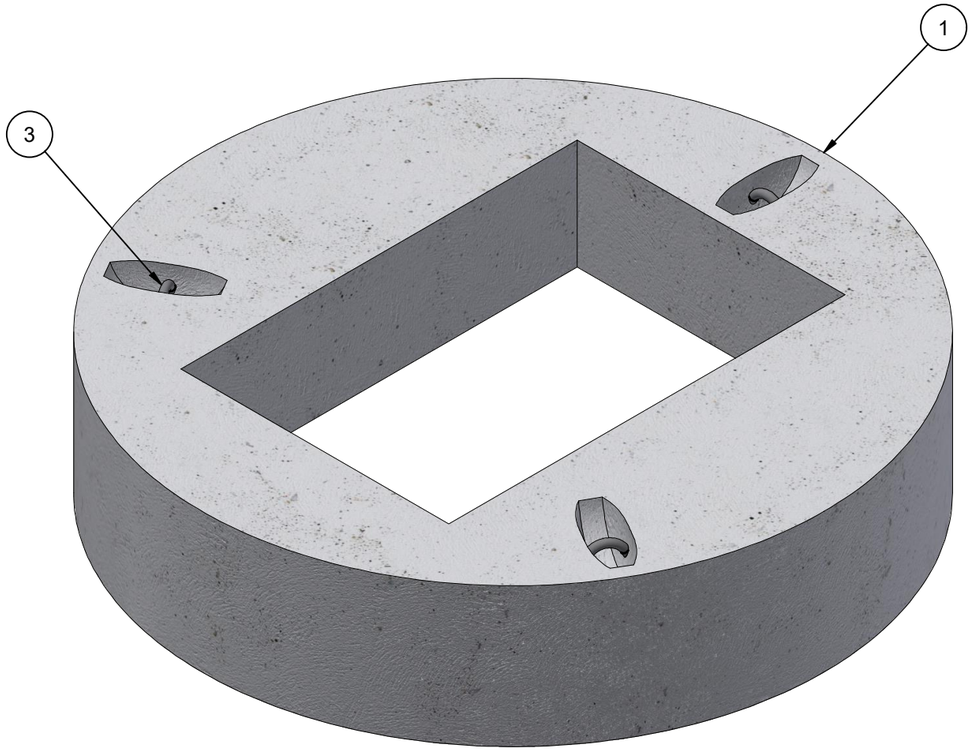

ISOMETRIC

LIFTING NOTES
■ THIS CONCRETE PRODUCT IS DESIGNED TO BE LIFTED AT 2500PSI WITH 3 LIFT CONNECTIONS EQUALLY LOADED TO 3 LIFTING POINTS AT A MINIMUM 60° SLING ANGLE, MEASURED FROM HORIZONTAL.

BURY DEPTH:	0.7' - 2.0' to Top		
WATER LEVEL:	Below Structure	APPROX. WEIGHT:	1625.19 Lbs
DESIGN SPEC:	ASTM C890,ACI 318	LOADING SPEC:	A-16 (AASHTO HS20-44)
REINFORCEMENT TYPE:	Rebar	LIFTING TYPE:	A-Anchor

JENSEN PRECAST EST. 1968

WWW.JENSENPRECAST.COM

©2021 Jensen Precast- All rights reserved.
All materials appearing as Jensen Precast documents and the like are proprietary work product and are protected under U.S. copyright and other laws.
Unless in conjunction with business conducted with Jensen Precast, any use of Jensen Precast work product without express, written consent is prohibited, and recipient is prohibited from distributing any and all work product to non-approved third parties under penalty of civil action.

CHANGE HISTORY			
NO.	DESCRIPTION	DATE	BY
A	LEGACY PART		
B	UPDATED LIFTING TO UTILITY ANCHORS ADDED REINF PAGE	10/22/2020	VGL

DESCRIPTION: Manhole D4858x13 Flat Top TU 25"x37"C CASTING LAYOUT				REV: B-5
PART NUMBER:	100017287	DRAWN BY:	V. Lund	SHEET: 1 OF 2
CREATED:	1/26/2017	MODIFIED:	7/1/2021	

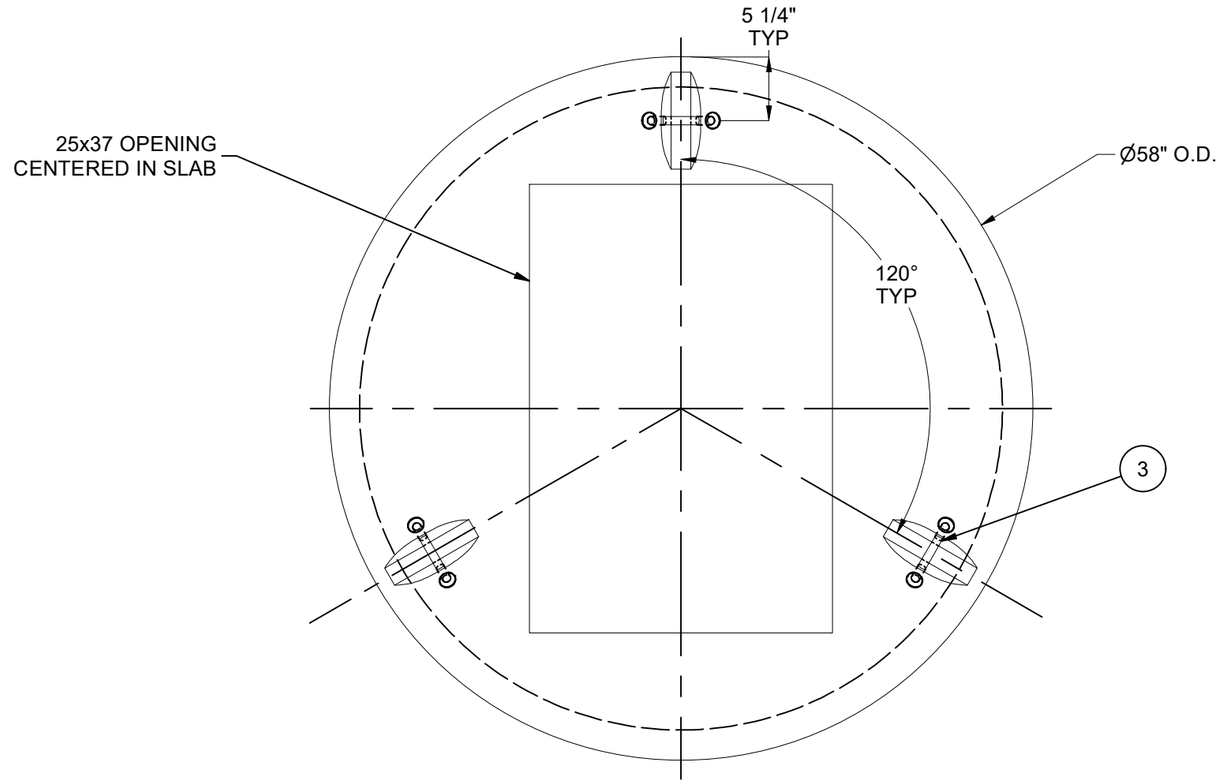

PLAN VIEW

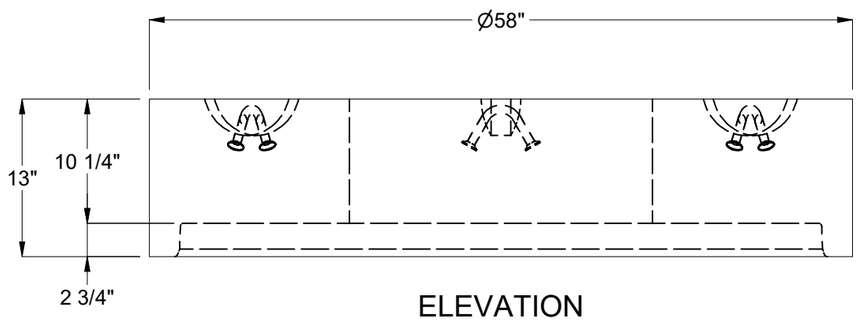

ELEVATION

100017287.idw

BURY DEPTH:	0.7' - 2.0' to Top		
WATER LEVEL:	Below Structure	APPROX. WEIGHT:	1625.19 Lbs
DESIGN SPEC:	ASTM C890,ACI 318	LOADING SPEC:	A-16 (AASHTO HS20-44)
REINFORCEMENT TYPE:	Rebar	LIFTING TYPE:	A-Anchor

JENSEN PRECAST EST. 1968

WWW.JENSENPRECAST.COM

©2021 Jensen Precast- All rights reserved.
All materials appearing as Jensen Precast documents and the like are proprietary work product and are protected under U.S. copyright and other laws.
Unless in conjunction with business conducted with Jensen Precast, any use of Jensen Precast work product without express, written consent is prohibited, and recipient is prohibited from distributing any and all work product to non-approved third parties under penalty of civil action.

DESCRIPTION:	Manhole D4858x13 Flat Top TU 25"x37"C CASTING DRAWING		REV: B-5
PART NUMBER:	100017287	DRAWN BY:	V. Lund
CREATED:	1/26/2017	MODIFIED:	7/1/2021
			SHEET: 2 OF 2