DESIGN NOTES:

- CONCRETE SHALL HAVE A 28 DAY MINIMUM COMPRESSIVE STRENGTH OF 6000 PSI
- WELDED WIRE REINFORCEMENT SHALL COMPLY WITH ASTM A1064

PRODUCTION NOTES:

- LIFTING INSERTS SHALL BE INSTALLED PER MANUFACTURER'S REQUIREMENTS

BILL OF MATERIALS

ITEM	QTY	PART NUMBER	DESCRIPTION
1	5.338 ft^3	100011427	CONCRETE MIX GENERIC 6000 PSI
2	1	100013506	ANCHOR CABLE LOOP LIFT PIPE 3/8
3	1	200044988	RCP CAGE P12B Class 5 Bell-Spigot 96L

ALTERNATE REINFORCING OPTION

PART NUMBER	DESCRIPTION
200057969	WWR REINFORCING CAGE 200057969

100014990.idw

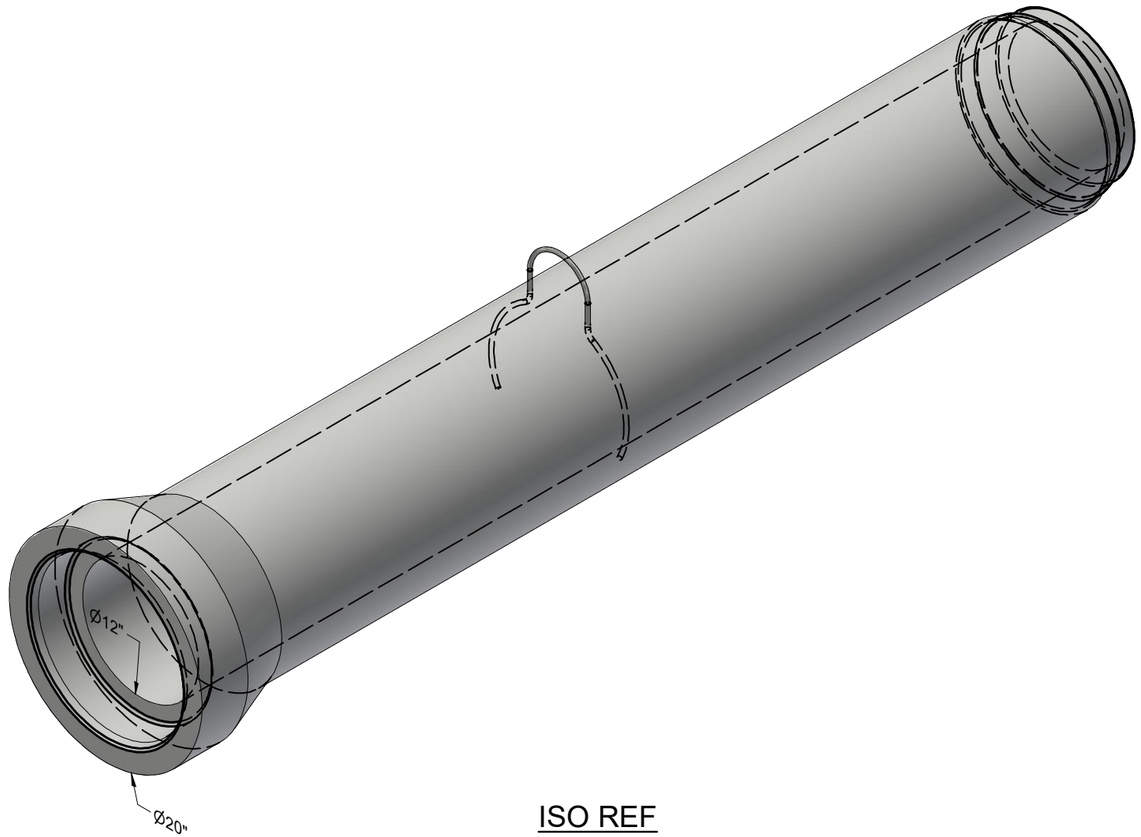

ISO REF

LIFTING NOTES
■ THIS CONCRETE PRODUCT IS DESIGNED TO BE LIFTED AT 6000 PSI WITH 1 LIFT CONNECTIONS EQUALLY LOADED TO 1 LIFTING POINTS AT A MINIMUM 90° SLING ANGLE, MEASURED FROM HORIZONTAL.
*All rigging shall be design by a qualified professional. Loading diagrams show illustrations of possible rigging setups to achieve the required sling angle and load leg equalization. Other valid rigging configurations are possible. A qualified professional must be consulted prior to lifting.

RIGGING DIAGRAM*	M

BURY DEPTH:	to		
WATER LEVEL:		WEIGHT:	803.91 Lbs
DESIGN SPEC:	ASTM C76/AASHTO M170	LOADING SPEC:	Class 5
REINFORCEMENT TYPE:	Plain Wire	LIFTING TYPE:	Cable

JENSEN PRECAST EST. 1968

WWW.JENSENPRECAST.COM

©2024 Jensen Precast- All rights reserved.
All materials appearing as Jensen Precast documents and the like are proprietary work product and are protected under U.S. copyright and other laws.
Unless in conjunction with business conducted with Jensen Precast, any use of Jensen Precast work product without express, written consent is prohibited, and recipient is prohibited from distributing any and all work product to non-approved third parties under penalty of civil action.

CHANGE HISTORY

NO.	DESCRIPTION	DATE	BY
A	2111-51842	11-09-21	DCH
B	ECR 49384 UPDATE / LIFTING NOTES	02-15-2024	EDC
C			

DESCRIPTION:	RCP P12B Class 5 Bell - Spigot 96L		REV: C-1
PART NUMBER:	100014990	DRAWN BY:	E CAMERON
CREATED:	11/9/2021	MODIFIED:	2/15/2024
			SHEET: 1 OF 2

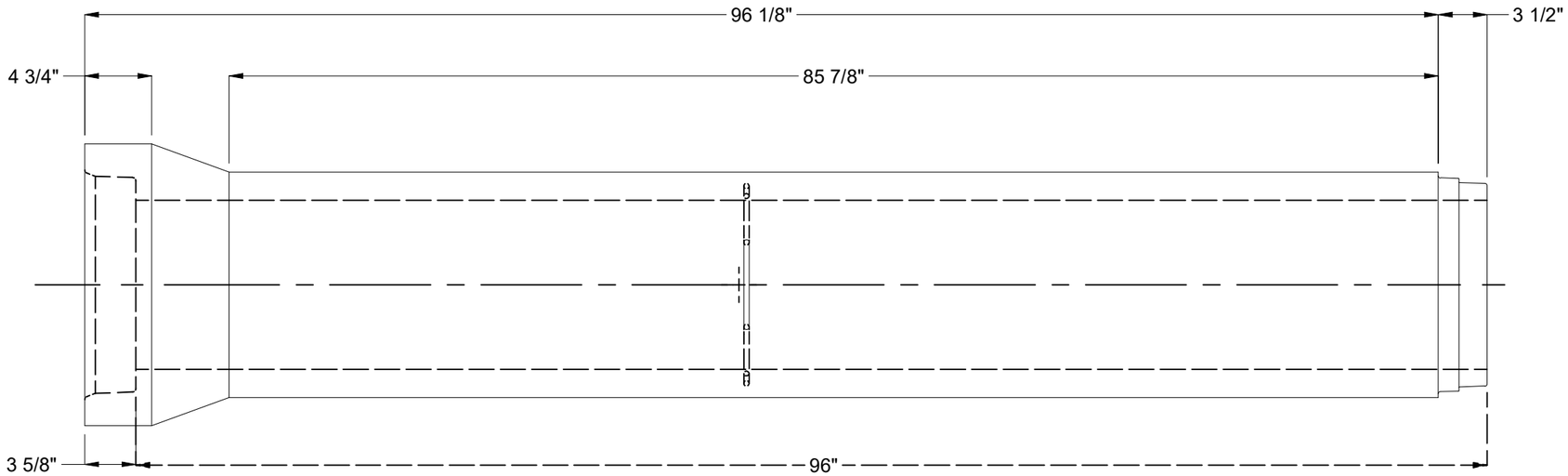

PLAN VIEW

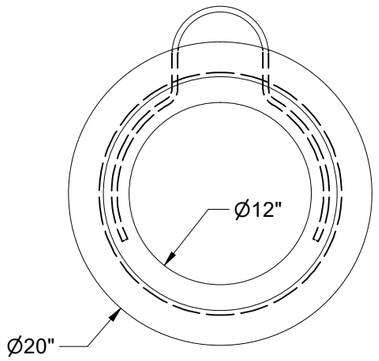

GROOVE END

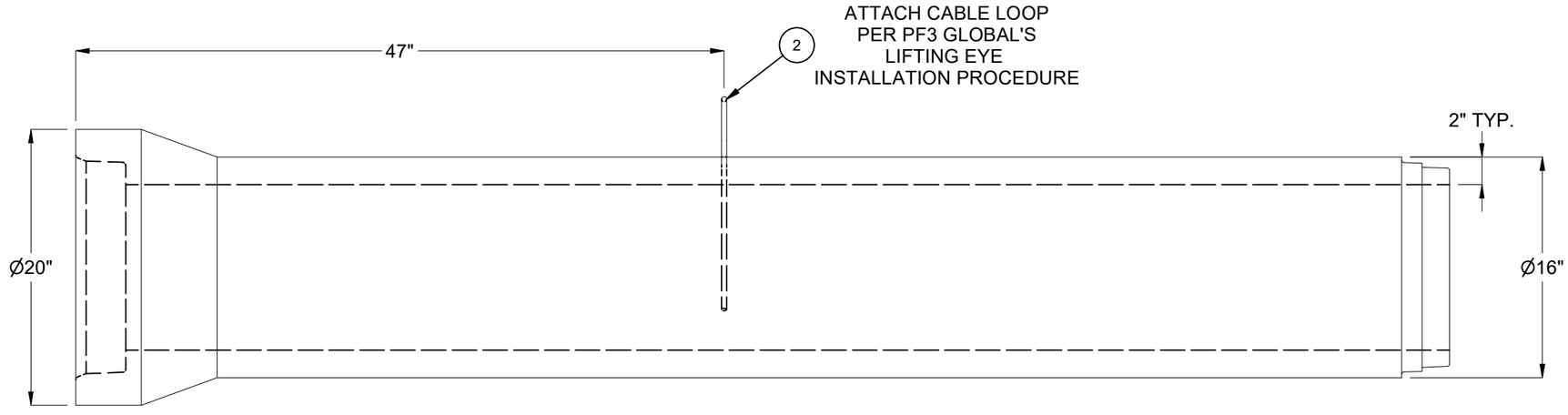

ELEVATION

BURY DEPTH:	to			DESCRIPTION: RCP P12B Class 5 Bell - Spigot 96L	REV: C-1
WATER LEVEL:		WEIGHT:	803.91 Lbs		
DESIGN SPEC:	ASTM C76/AASHTO M170	LOADING SPEC:	Class 5		
REINFORCEMENT TYPE:	Plain Wire	LIFTING TYPE:	Cable	PART NUMBER: 100014990	DRAWN BY: E CAMERON
				CREATED: 11/9/2021	MODIFIED: 2/15/2024

JENSEN PRECAST EST. 1968

WWW.JENSENPRECAST.COM

©2024 Jensen Precast- All rights reserved.
All materials appearing as Jensen Precast documents and the like are proprietary work product and are protected under U.S. copyright and other laws.
Unless in conjunction with business conducted with Jensen Precast, any use of Jensen Precast work product without express, written consent is prohibited, and recipient is prohibited from distributing any and all work product to non-approved third parties under penalty of civil action.

SHEET: 2 OF 2

100014990.idw