DESIGN NOTES:

- CONCRETE SHALL HAVE A 28 DAY MINIMUM COMPRESSIVE STRENGTH OF 5000 PSI

PRODUCTION NOTES:

- LIFTING INSERTS SHALL BE INSTALLED PER MANUFACTURER'S REQUIREMENTS
- APPLIED FINISH - NONE
- EXTERNAL LINER/COATING -

BILL OF MATERIALS			
ITEM	QTY	PART NUMBER	DESCRIPTION
1	3.246 ft^3	100011425	CONCRETE MIX GENERIC 5000 PSI
2	1	100019356	REINFORCING MAT 100019356
3	1	100002949	ANCHOR CABLE LOOP LIFT 1/4 x 8-1/4 CLPS2K MB - White Tag

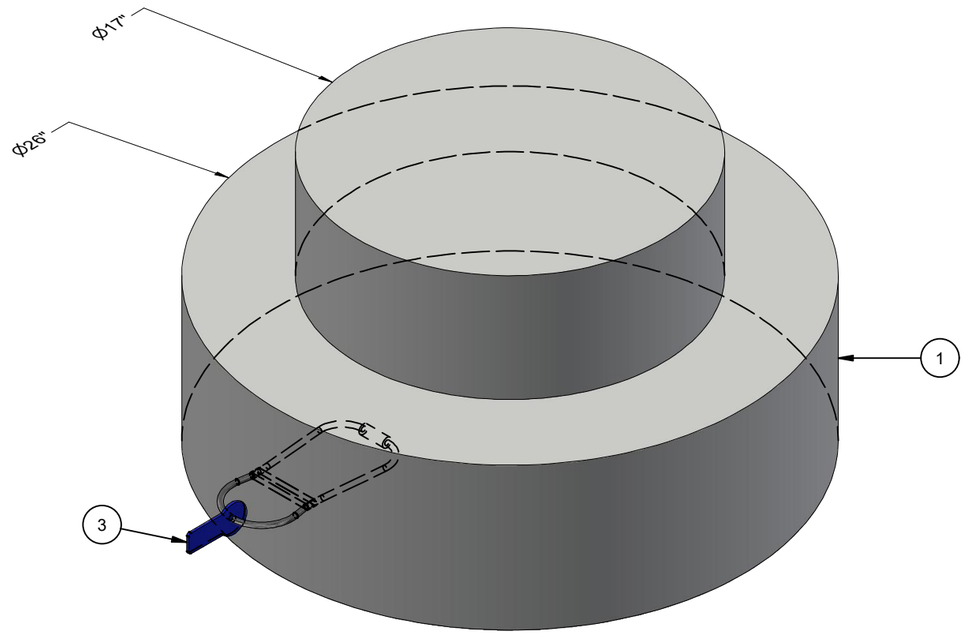

ISO REF

NOTE:

RCP PLUGS ARE INTENDED TO BE SECURED IN PLACE BY COMPACTED BACKFILL MATERIAL TO THE FULL HEIGHT OF THE EXCAVATION. EXTERNAL SOIL PRESSURE SHALL BE GREATER THAN THE INTERNAL HYDROSTATIC PRESSURE WITH A F.O.S. OF 2:1. A MECHANICAL CONNECTION SPECIFIED BY OTHERS SHALL BE USED WHEN THE EXTERNAL SOIL PRESSURE IS NOT GREATER THAN THE INTERNAL HYDROSTATIC PRESSURE BY A FACTOR OF 2.

RIGGING DIAGRAM*	M

LIFTING NOTES
■ THIS CONCRETE PRODUCT IS DESIGNED TO BE LIFTED AT 2500 PSI WITH 1 LIFT CONNECTIONS EQUALLY LOADED TO 1 LIFTING POINTS AT A MINIMUM 90° SLING ANGLE, MEASURED FROM HORIZONTAL.
*All rigging shall be design by a qualified professional. Loading diagrams show illustrations of possible rigging setups to achieve the required sling angle and load leg equalization. Other valid rigging configurations are possible. A qualified professional must be consulted prior to lifting.

CHANGE HISTORY			
REV	DESCRIPTION	DATE	BY
A	INITIAL RELEASE 2404-56775	04/04/2024	EDC
B			
C			

BURY DEPTH:	N/A to N/A		
WATER LEVEL:	N/A	APPROX. WEIGHT:	488.31 Lbs
DESIGN SPEC:	N/A	LOADING SPEC:	Hydrostatic
REINFORCEMENT TYPE:	Rebar	LIFTING TYPE:	Cable

JENSEN PRECAST EST. 1968

WWW.JENSENPRECAST.COM

©2024 Jensen Precast- All rights reserved.
All materials appearing as Jensen Precast documents and the like are proprietary work product and are protected under U.S. copyright and other laws.
Unless in conjunction with business conducted with Jensen Precast, any use of Jensen Precast work product without express, written consent is prohibited, and recipient is prohibited from distributing any and all work product to non-approved third parties under penalty of civil action.

DESCRIPTION:	RCP18 BELL PLUG CASTING LAYOUT	REV:	A-3
PART NUMBER:	100013999	DRAWN BY:	E CAMERON
CREATED:	4/4/2024	MODIFIED:	4/8/2024
		SHEET:	1 OF 2

100013999.idw

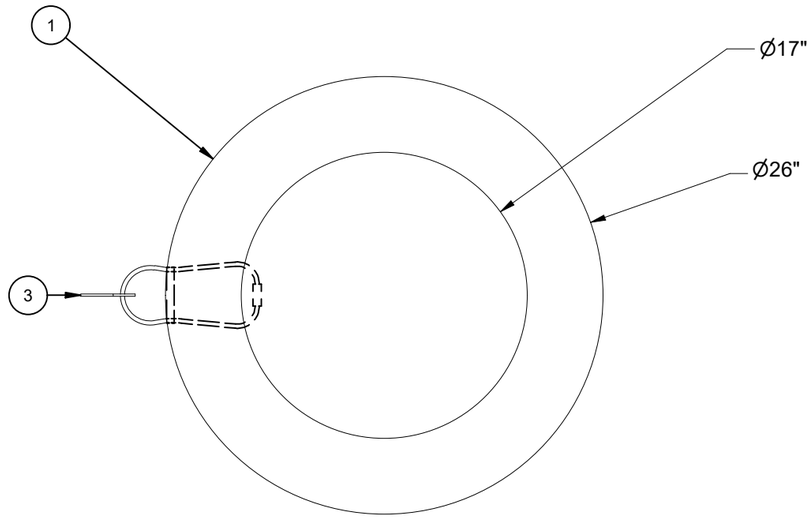

PLAN VIEW

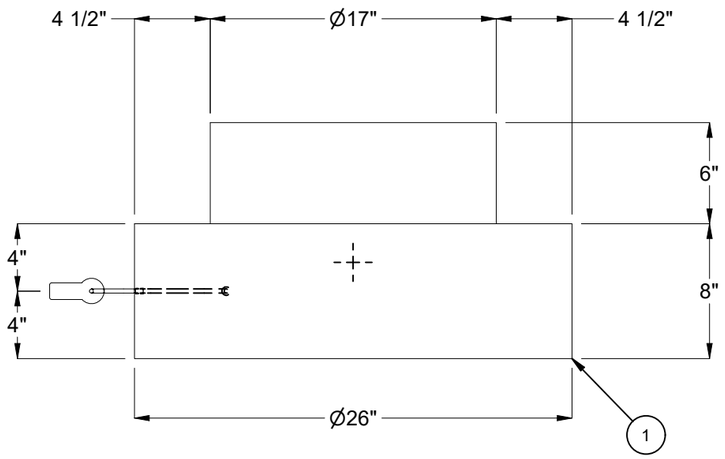

ELEVATION VIEW

BURY DEPTH:	N/A to N/A		
WATER LEVEL:	N/A	APPROX. WEIGHT:	488.31 Lbs
DESIGN SPEC:	N/A	LOADING SPEC:	Hydrostatic
REINFORCEMENT TYPE:	Rebar	LIFTING TYPE:	Cable

JENSEN PRECAST EST. 1968

WWW.JENSENPRECAST.COM

©2024 Jensen Precast- All rights reserved.
All materials appearing as Jensen Precast documents and the like are proprietary work product and are protected under U.S. copyright and other laws.
Unless in conjunction with business conducted with Jensen Precast, any use of Jensen Precast work product without express, written consent is prohibited, and recipient is prohibited from distributing any and all work product to non-approved third parties under penalty of civil action.

DESCRIPTION:	RCP18 BELL PLUG CASTING DRAWING		REV: A-3
PART NUMBER:	100013999	DRAWN BY:	E CAMERON
CREATED:	4/4/2024	MODIFIED:	4/8/2024
			SHEET: 2 OF 2

100013999.idw