NOTES
■ FOR COMPLETE DESIGN AND PRODUCT INFORMATION CONTACT JENSEN PRECAST.

BILL OF MATERIALS

ITEM	QTY	PART NUMBER	DESCRIPTION
1	107.623 ft^3	100002728	CONCRETE MIX GENERIC 4000 PSI
2	1	200045057	RCP CAGE P72C Class 3 Bell-Spigot 96L-INNER
3	1	200045058	RCP CAGE P72C Class 3 Bell-Spigot 96L-OUTER

ALTERNATE REINFORCING OPTION

PART NUMBER	DESCRIPTION
100019402	RCP WWR CAGE P72C Class 3 Bell-Spigot 96L

100013922.idw

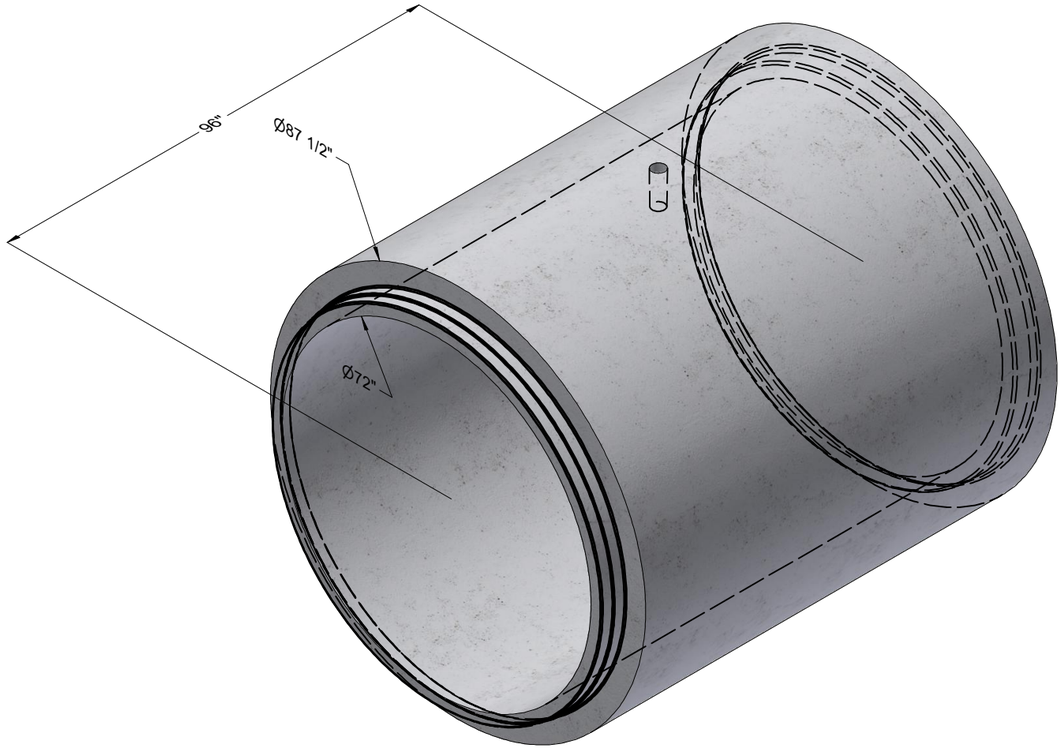

ISO REF

LIFTING NOTES
■ THIS CONCRETE PRODUCT IS DESIGNED TO BE LIFTED AT 4000 PSI WITH 1 LIFT CONNECTIONS EQUALLY LOADED TO 1 LIFTING POINTS AT A MINIMUM 90° SLING ANGLE, MEASURED FROM HORIZONTAL.

BURY DEPTH:	to		
WATER LEVEL:		APPROX. WEIGHT:	16174.07 Lbs
DESIGN SPEC:	ASTM C76/AASHTO M170	LOADING SPEC:	Class 3
REINFORCEMENT TYPE:	WWR Plain	LIFTING TYPE:	Teacup

JENSEN PRECAST EST. 1968

WWW.JENSENPRECAST.COM

©2023 Jensen Precast- All rights reserved.
All materials appearing as Jensen Precast documents and the like are proprietary work product and are protected under U.S. copyright and other laws.
Unless in conjunction with business conducted with Jensen Precast, any use of Jensen Precast work product without express, written consent is prohibited, and recipient is prohibited from distributing any and all work product to non-approved third parties under penalty of civil action.

CHANGE HISTORY

REV	DESCRIPTION	DATE	BY
A	LEGACY RELEASE		
B	2023-55264-2	05/04/2023	EDC
C			

DESCRIPTION:	RCP P72C Class 3 Bell - Spigot 96L CASTING LAYOUT		REV: B-1
PART NUMBER:	100013922	DRAWN BY: E CAMERON	SHEET: 1 OF 2
CREATED:	5/4/2023	MODIFIED: 5/10/2023	

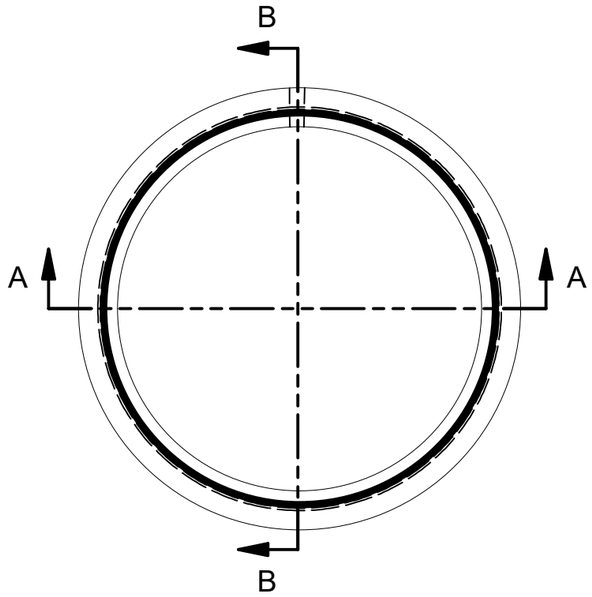

PLAN VIEW

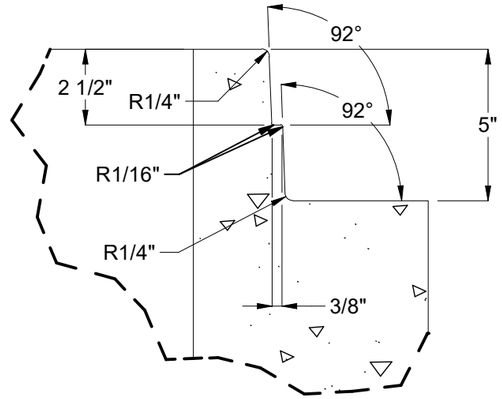

DETAIL A

SECTION A-A

SECTION B-B

BURY DEPTH:	to		
WATER LEVEL:		APPROX. WEIGHT:	16174.07 Lbs
DESIGN SPEC:	ASTM C76/AASHTO M170	LOADING SPEC:	Class 3
REINFORCEMENT TYPE:	WWR Plain	LIFTING TYPE:	Teacup

JENSEN PRECAST EST. 1968

WWW.JENSENPRECAST.COM

©2023 Jensen Precast- All rights reserved.
All materials appearing as Jensen Precast documents and the like are proprietary work product and are protected under U.S. copyright and other laws.
Unless in conjunction with business conducted with Jensen Precast, any use of Jensen Precast work product without express, written consent is prohibited, and recipient is prohibited from distributing any and all work product to non-approved third parties under penalty of civil action.

DESCRIPTION:	RCP P72C Class 3 Bell - Spigot 96L CASTING DRAWING		REV: B-1
PART NUMBER:	100013922	DRAWN BY:	E CAMERON
CREATED:	5/4/2023	MODIFIED:	5/10/2023
			SHEET: 2 OF 2

100013922.idw