NOTES
■ FOR COMPLETE DESIGN AND PRODUCT INFORMATION CONTACT JENSEN PRECAST.

BILL OF MATERIALS

ITEM	QTY	PART NUMBER	DESCRIPTION
1	28.355 ft^3	100002728	CONCRETE MIX GENERIC 4000 PSI
2	1	200079864	RCP Cage P36B Class 4 Bell-Spigot 96L-Inner
3	1	200079865	RCP Cage P36B Class 4 Bell - Spigot 96L-Outer

100013899.idw



ISO REF

LIFTING NOTES
■ THIS CONCRETE PRODUCT IS DESIGNED TO BE LIFTED AT 4000 PSI WITH 1 LIFT CONNECTIONS EQUALLY LOADED TO 1 LIFTING POINTS AT A MINIMUM 90° SLING ANGLE, MEASURED FROM HORIZONTAL.
*All rigging shall be design by a qualified professional. Loading diagrams show illustrations of possible rigging setups to achieve the required sling angle and load leg equalization. Other valid rigging configurations are possible. A qualified professional must be consulted prior to lifting.

RIGGING DIAGRAM*	M

BURY DEPTH:	to		
WATER LEVEL:		WEIGHT:	4261.25 Lbs
DESIGN SPEC:	ASTM C76/AASHTO M170	LOADING SPEC:	Class 4
REINFORCEMENT TYPE:	WWR Deformed,MBK	LIFTING TYPE:	Teacup

JENSEN PRECAST EST. 1968

WWW.JENSENPRECAST.COM

©2024 Jensen Precast- All rights reserved.
All materials appearing as Jensen Precast documents and the like are proprietary work product and are protected under U.S. copyright and other laws.
Unless in conjunction with business conducted with Jensen Precast, any use of Jensen Precast work product without express, written consent is prohibited, and recipient is prohibited from distributing any and all work product to non-approved third parties under penalty of civil action.

REVISION HISTORY

REV	DESCRIPTION	DATE	BY
1	2309-55827	6/5/23	MGL

DESCRIPTION:	RCP P36B Class 4 Bell - Spigot 96L Concrete Bell CASTING LAYOUT	REV:	A-9
PART NUMBER:	100013899	DRAWN BY:	M. Lincoln
CREATED:	2/12/2020	MODIFIED:	5/13/2024
		SHEET:	1 OF 2

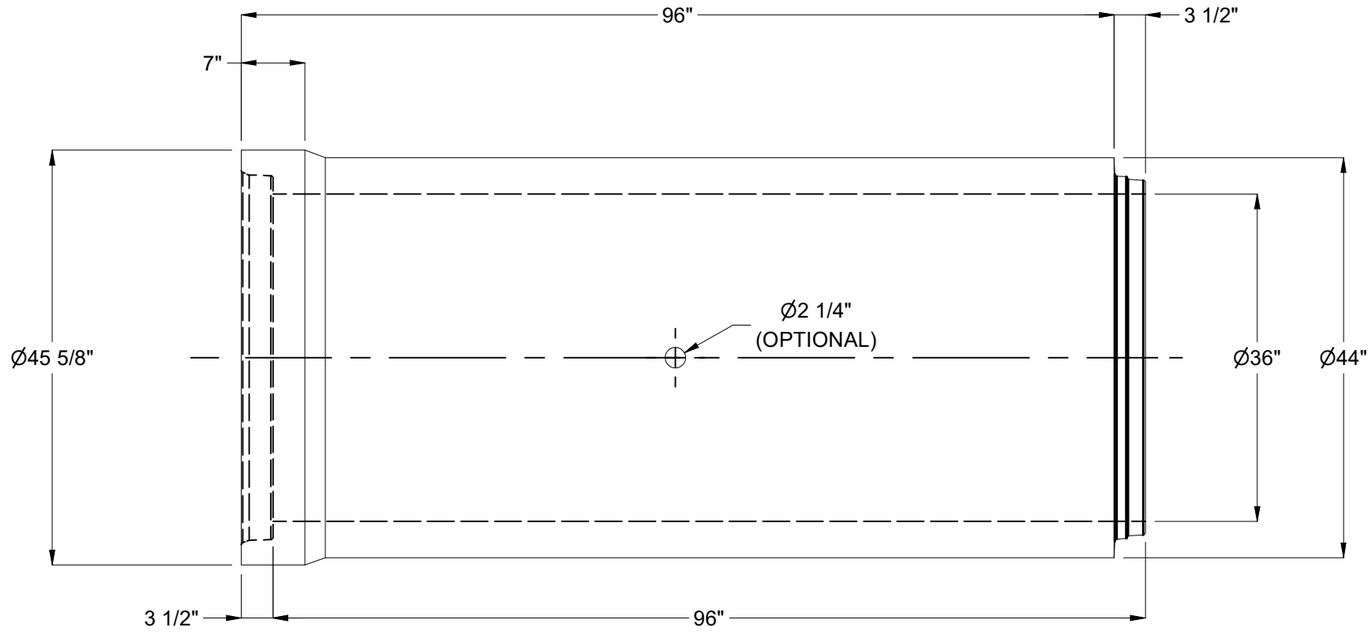

PLAN VIEW

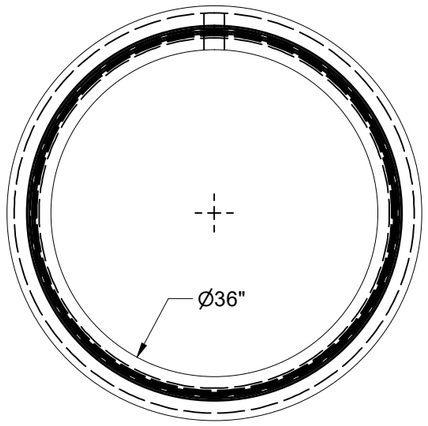

GROOVE END

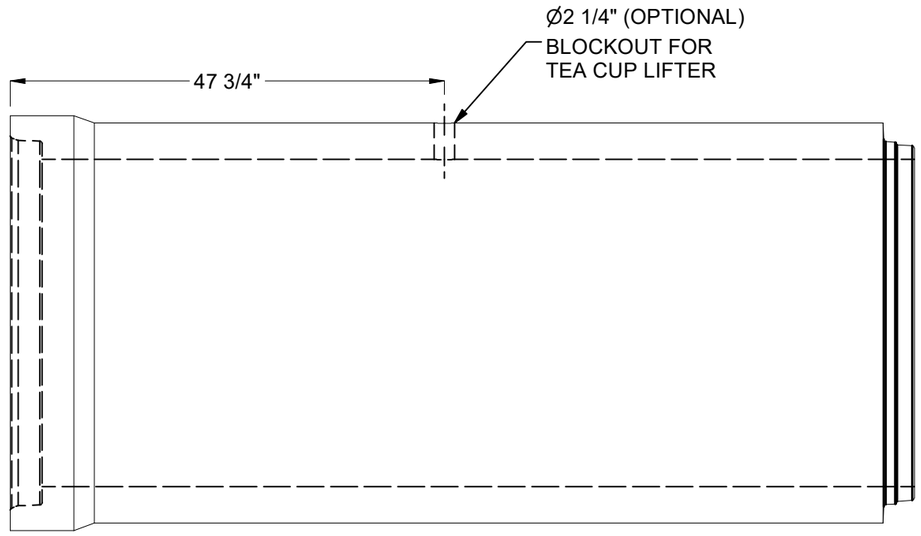

ELEVATION

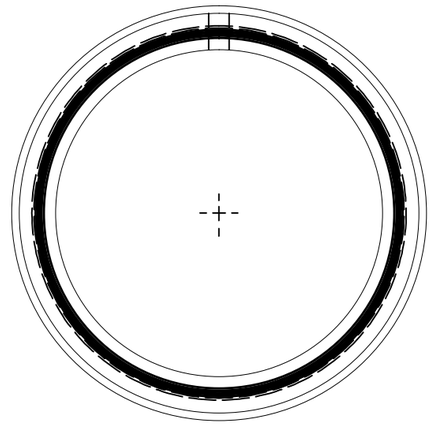

TONGUE END

BURY DEPTH:	to		
WATER LEVEL:		WEIGHT:	4261.25 Lbs
DESIGN SPEC:	ASTM C76/AASHTO M170	LOADING SPEC:	Class 4
REINFORCEMENT TYPE:	WWR Deformed,MBK	LIFTING TYPE:	Teacup

JENSEN PRECAST EST. 1968

WWW.JENSENPRECAST.COM

©2024 Jensen Precast- All rights reserved.
All materials appearing as Jensen Precast documents and the like are proprietary work product and are protected under U.S. copyright and other laws.
Unless in conjunction with business conducted with Jensen Precast, any use of Jensen Precast work product without express, written consent is prohibited, and recipient is prohibited from distributing any and all work product to non-approved third parties under penalty of civil action.

DESCRIPTION:	RCP P36B Class 4 Bell - Spigot 96L Concrete Bell CASTING DRAWING		REV: A-9
PART NUMBER:	100013899	DRAWN BY:	M. Lincoln
CREATED:	2/12/2020	MODIFIED:	5/13/2024
			SHEET: 2 OF 2

100013899.idw