NOTES
■ FOR COMPLETE DESIGN AND PRODUCT INFORMATION CONTACT JENSEN PRECAST.

BILL OF MATERIALS

ITEM	UNIT QTY	QTY	PART NUMBER	DESCRIPTION
1	15.746 ft^3	15.746 ft^3	100011427	CONCRETE MIX GENERIC 6000 PSI
2	1	1	100013506	ANCHOR CABLE LOOP LIFT PIPE 3/8
3	1	1	200040883	RCP CAGE P24B Class 5 Bell-Spigot 96L

ALTERNATE REINFORCING OPTION	
PART NUMBER	DESCRIPTION
200041130	WWR REINFORCING CAGE 200041130

100013894.idw

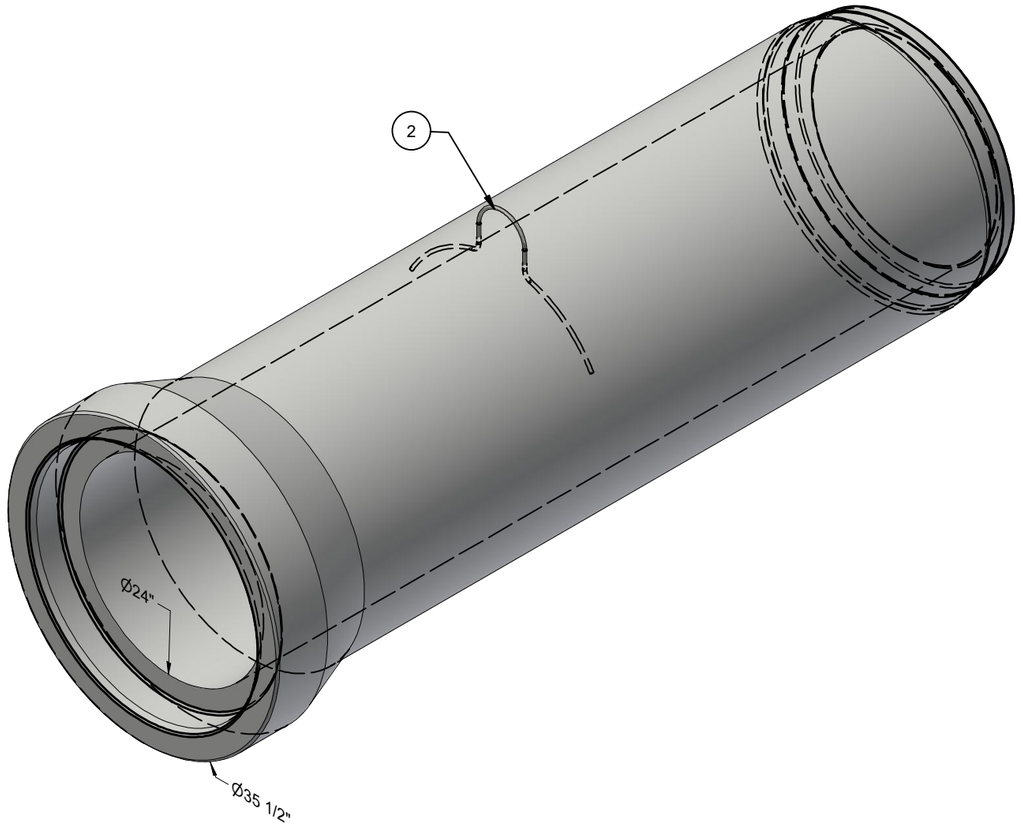

ISO REF

LIFTING NOTES
■ THIS CONCRETE PRODUCT IS DESIGNED TO BE LIFTED AT 6000PSI WITH 1 LIFT CONNECTIONS EQUALLY LOADED TO 1 LIFTING POINTS AT A MINIMUM 90° SLING ANGLE, MEASURED FROM HORIZONTAL.

BURY DEPTH:	to		
WATER LEVEL:		WEIGHT:	2367.5 Lbs
DESIGN SPEC:	ASTM C76/AASHTO M170	LOADING SPEC:	Class 5
REINFORCEMENT TYPE:	Plain Wire	LIFTING TYPE:	Cable

JENSEN PRECAST EST. 1968

WWW.JENSENPRECAST.COM

©2023 Jensen Precast- All rights reserved.
All materials appearing as Jensen Precast documents and the like are proprietary work product and are protected under U.S. copyright and other laws.
Unless in conjunction with business conducted with Jensen Precast, any use of Jensen Precast work product without express, written consent is prohibited, and recipient is prohibited from distributing any and all work product to non-approved third parties under penalty of civil action.

REVISION HISTORY			
REV	DESCRIPTION	DATE	BY
A	LEGACY DRAWING	-	-
B	2111-51892 - INITIAL RELEASE	8-29-22	DCH
C	JOINT REVISED TO HAWKEYE 56789A	5-10-23	RM

DESCRIPTION:	RCP P24B Class 5 Bell - Spigot 96L CASTING LAYOUT		REV: C-1
PART NUMBER:	100013894	DRAWN BY:	MLR
CREATED:	2/12/2020	MODIFIED:	5/10/2023
			SHEET: 1 OF 2

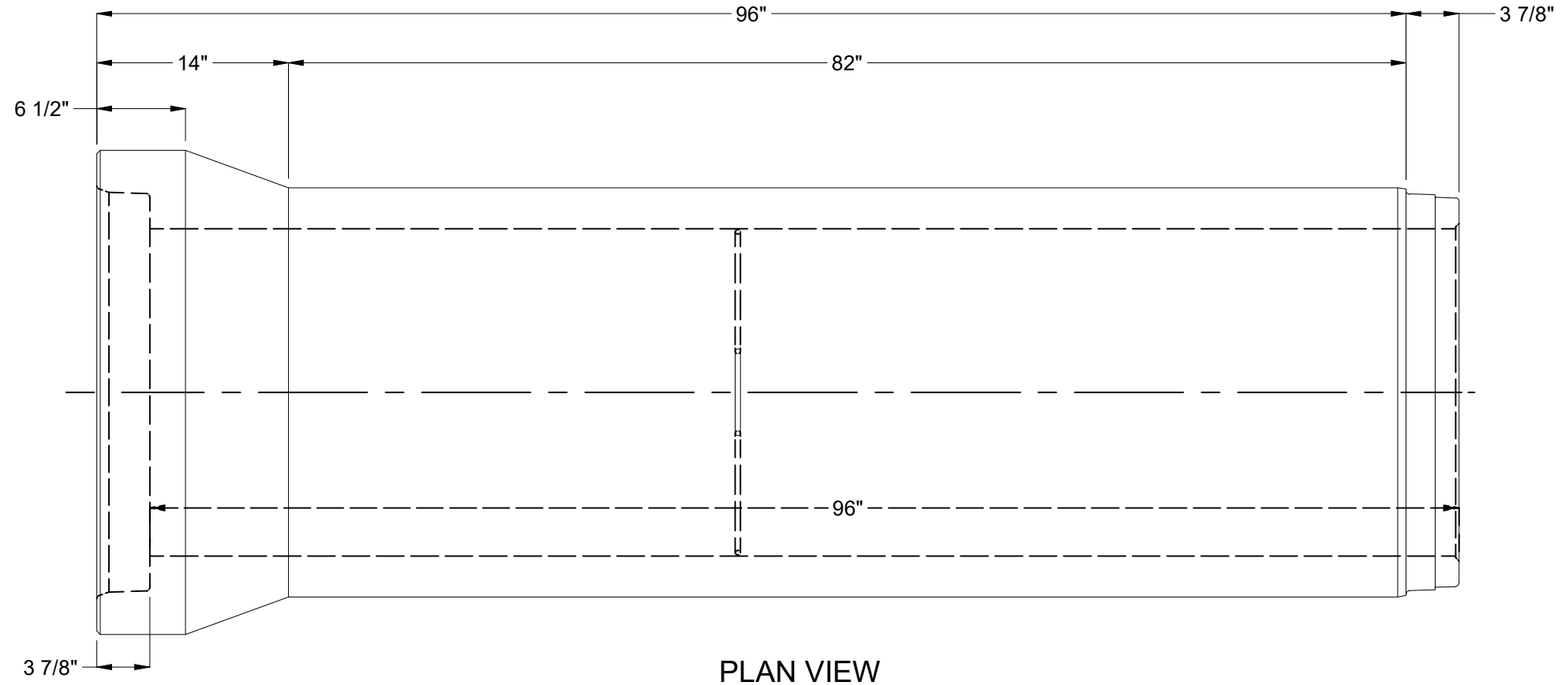

PLAN VIEW

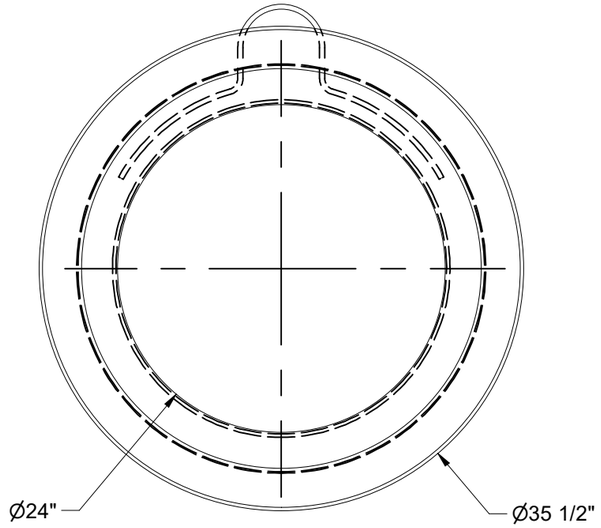

GROOVE END

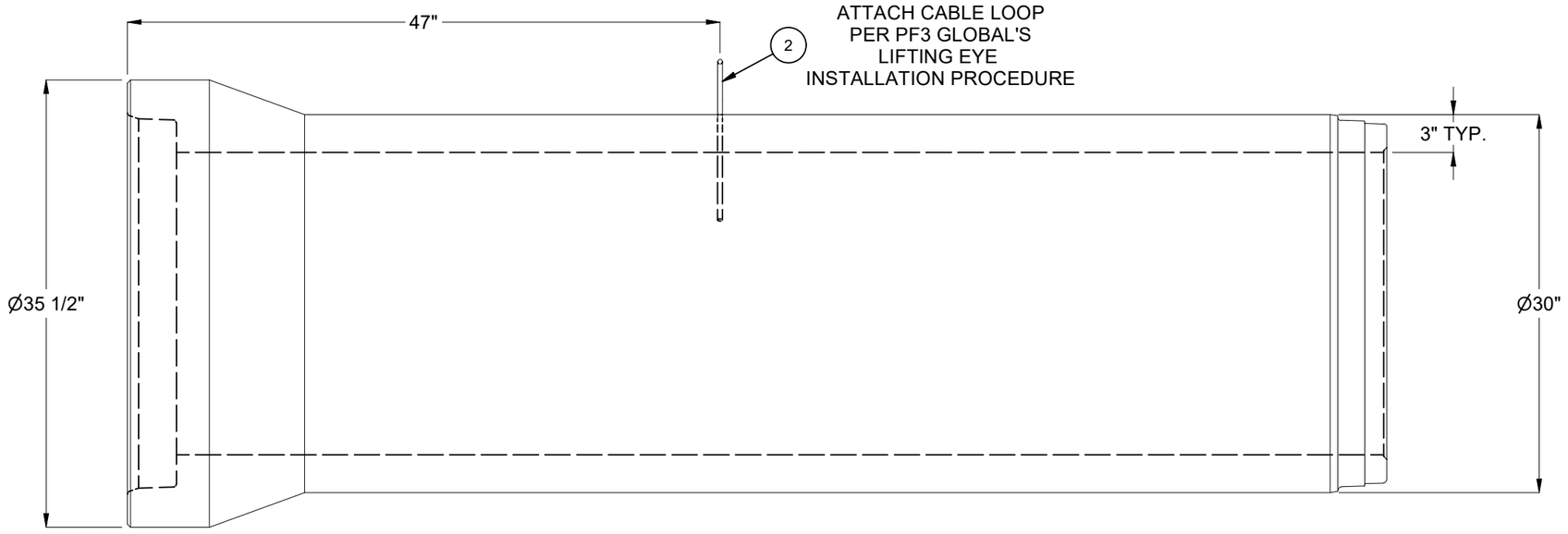

ELEVATION

BURY DEPTH:	to		
WATER LEVEL:		WEIGHT:	2367.5 Lbs
DESIGN SPEC:	ASTM C76/AASHTO M170	LOADING SPEC:	Class 5
REINFORCEMENT TYPE:	Plain Wire	LIFTING TYPE:	Cable

JENSEN PRECAST EST. 1968

WWW.JENSENPRECAST.COM

©2023 Jensen Precast- All rights reserved.
All materials appearing as Jensen Precast documents and the like are proprietary work product and are protected under U.S. copyright and other laws.
Unless in conjunction with business conducted with Jensen Precast, any use of Jensen Precast work product without express, written consent is prohibited, and recipient is prohibited from distributing any and all work product to non-approved third parties under penalty of civil action.

DESCRIPTION:	RCP P24B Class 5 Bell - Spigot 96L CASTING DRAWING		REV: C-1
PART NUMBER:	100013894	DRAWN BY:	MLR
CREATED:	2/12/2020	MODIFIED:	5/10/2023
			SHEET: 2 OF 2

100013894.idw