DESIGN NOTES
■ FOR COMPLETE DESIGN AND PRODUCT INFORMATION CONTACT JENSEN PRECAST.

BILL OF MATERIALS

ITEM	UNIT QTY	QTY	PART NUMBER	DESCRIPTION
1	1	1	400014464	REINFORCING MAT 400014464
2	24.127 ft^3	24.127 ft^3	100011425	CONCRETE MIX 5000 PSI
3	1	6	100003014	TERMINATOR DUCT WITH SEAL 4.5IN OR 4.35IN T4351
4	1	16	100012720	INSERT PLASTIC W/ BREAK OFF SNAP 0.5IN
5	1	4	100002867	ANCHOR DOGBONE P52 2T X 3-3/8" GALV

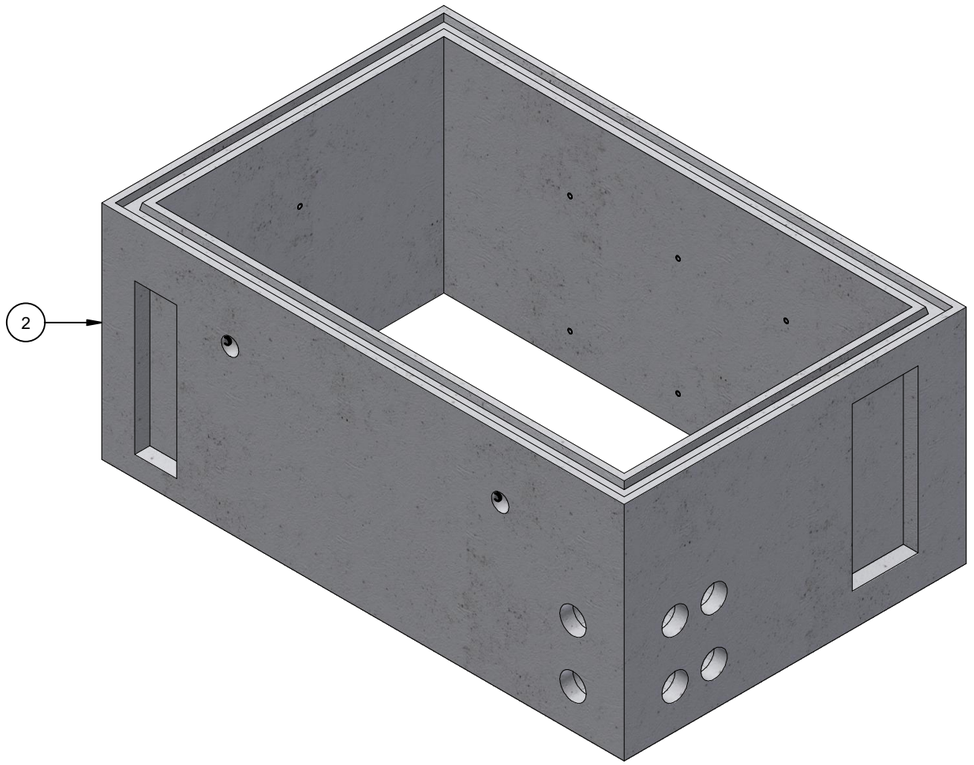

ISO LAYOUT

LIFTING NOTES
■ PLANT DEMOLDING AND FIELD INSTALLATION: MINIMUM HANDLING CONCRETE STRENGTH F'c = 2500 PSI RIGGING EQUALIZER REQUIRED TO EQUALIZE LOAD TO 4 LIFTING POINTS WITH A 90° SLING ANGLE.

BURY DEPTH:	0.3' - 2.3' to Top		
WATER LEVEL:	5.0'	APPROX. WEIGHT:	3637.48 Lbs
DESIGN SPEC:	ACI 318,ASTM C857	LOADING SPEC:	A-16 (AASHTO HS20-44)
REINFORCEMENT TYPE:	Rebar	LIFTING TYPE:	Dogbone

JENSEN PRECAST EST. 1968

WWW.JENSENPRECAST.COM

©2023 Jensen Precast- All rights reserved.
All materials appearing as Jensen Precast documents and the like are proprietary work product and are protected under U.S. copyright and other laws.
Unless in conjunction with business conducted with Jensen Precast, any use of Jensen Precast work product without express, written consent is prohibited, and recipient is prohibited from distributing any and all work product to non-approved third parties under penalty of civil action.

CHANGE HISTORY			
NO.	DESCRIPTION	DATE	BY
1	INITIAL RELEASE	3/15/2023	J.R.
2			
3			

DESCRIPTION:	Riser 4878x37 Knockout,Terminators CASTING LAYOUT		REV: A-7
PART NUMBER:	100013674	DRAWN BY:	J. Ramirez
CREATED:	2/24/2023	MODIFIED:	3/23/2023
			SHEET: 1 OF 2

100013674.idw

FEATURES		
ID	DESCRIPTION	QTY
A	7"(X) x 25"(Y) x 2" Deep Knockout	1
B	11"(X) x 27"(Y) x 2" Deep Knockout	1

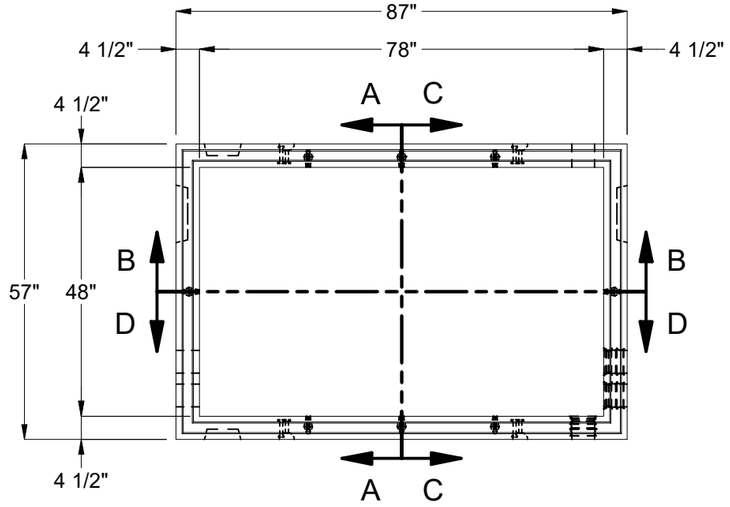

PLAN VIEW

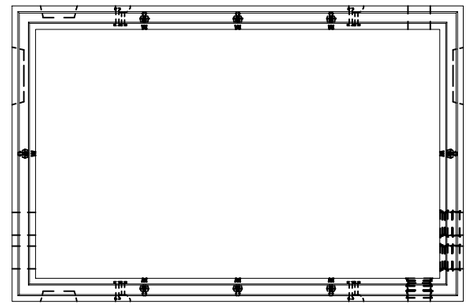

PLAN VIEW
(SHOWING OBJECT DIMENSIONS)

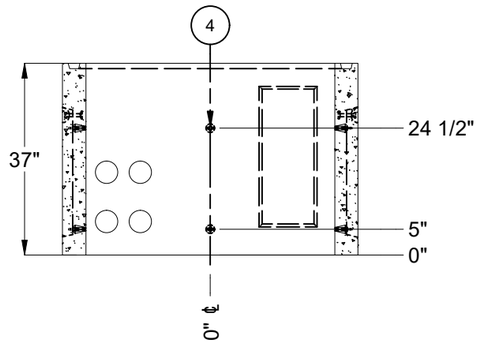

SECTION A-A

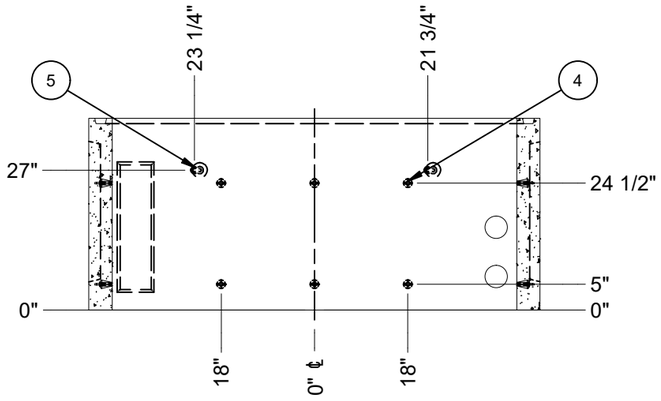

SECTION B-B

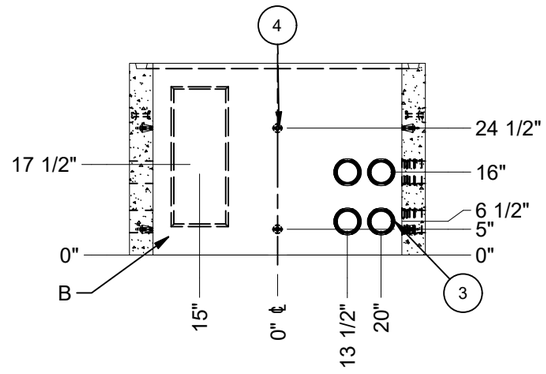

SECTION C-C

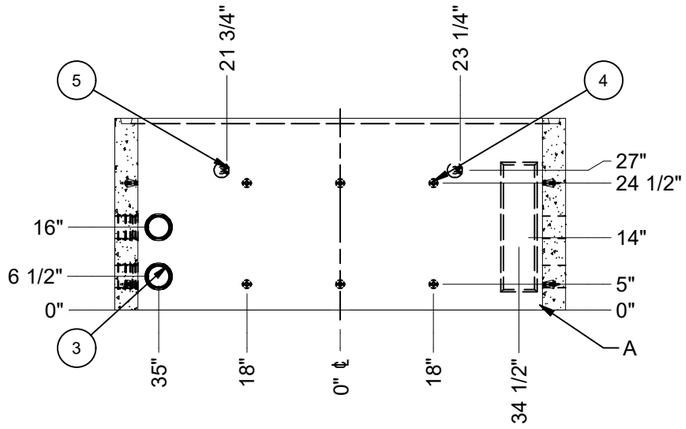

SECTION D-D

BURY DEPTH:	0.3' - 2.3' to Top		
WATER LEVEL:	5.0'	APPROX. WEIGHT:	3637.48 Lbs
DESIGN SPEC:	ACI 318,ASTM C857	LOADING SPEC:	A-16 (AASHTO HS20-44)
REINFORCEMENT TYPE:	Rebar	LIFTING TYPE:	Dogbone

JENSEN PRECAST EST. 1968

WWW.JENSENPRECAST.COM

©2023 Jensen Precast- All rights reserved.
All materials appearing as Jensen Precast documents and the like are proprietary work product and are protected under U.S. copyright and other laws.
Unless in conjunction with business conducted with Jensen Precast, any use of Jensen Precast work product without express, written consent is prohibited, and recipient is prohibited from distributing any and all work product to non-approved third parties under penalty of civil action.

DESCRIPTION:	Riser 4878x37 Knockout,Terminators CASTING DRAWING		REV: A-7
PART NUMBER:	100013674	DRAWN BY:	J. Ramirez
CREATED:	2/24/2023	MODIFIED:	3/23/2023
			SHEET: 2 OF 2

100013674.idw