NOTES
■ FOR COMPLETE DESIGN AND PRODUCT INFORMATION CONTACT JENSEN PRECAST.
■ THIS BARRIER DOES NOT HAVE A MASH RATING AND IS NOT DESIGNED TO BE USED IN TRAFFIC CONTROL APPLICATIONS OR DOT PROJECTS.
■ JENSEN PRECAST ASSUMES NO RESPONSIBILITY FOR THE INTENDED USE OF THIS BARRIER OR ANY COMBINATION OF BARRIERS.

BILL OF MATERIALS

ITEM	QTY	PART NUMBER	DESCRIPTION
1	25.249 ft^3	100011425	CONCRETE MIX GENERIC 5000 PSI
2	1	100018733	REINFORCING MAT 100018733
3	4	100001045	BARRIER END LOOPS TYPE K PLAIN
4	2	100007976	ANCHOR UTILITY .671DIA 5.625-SLAB PLAIN P75 6UA671

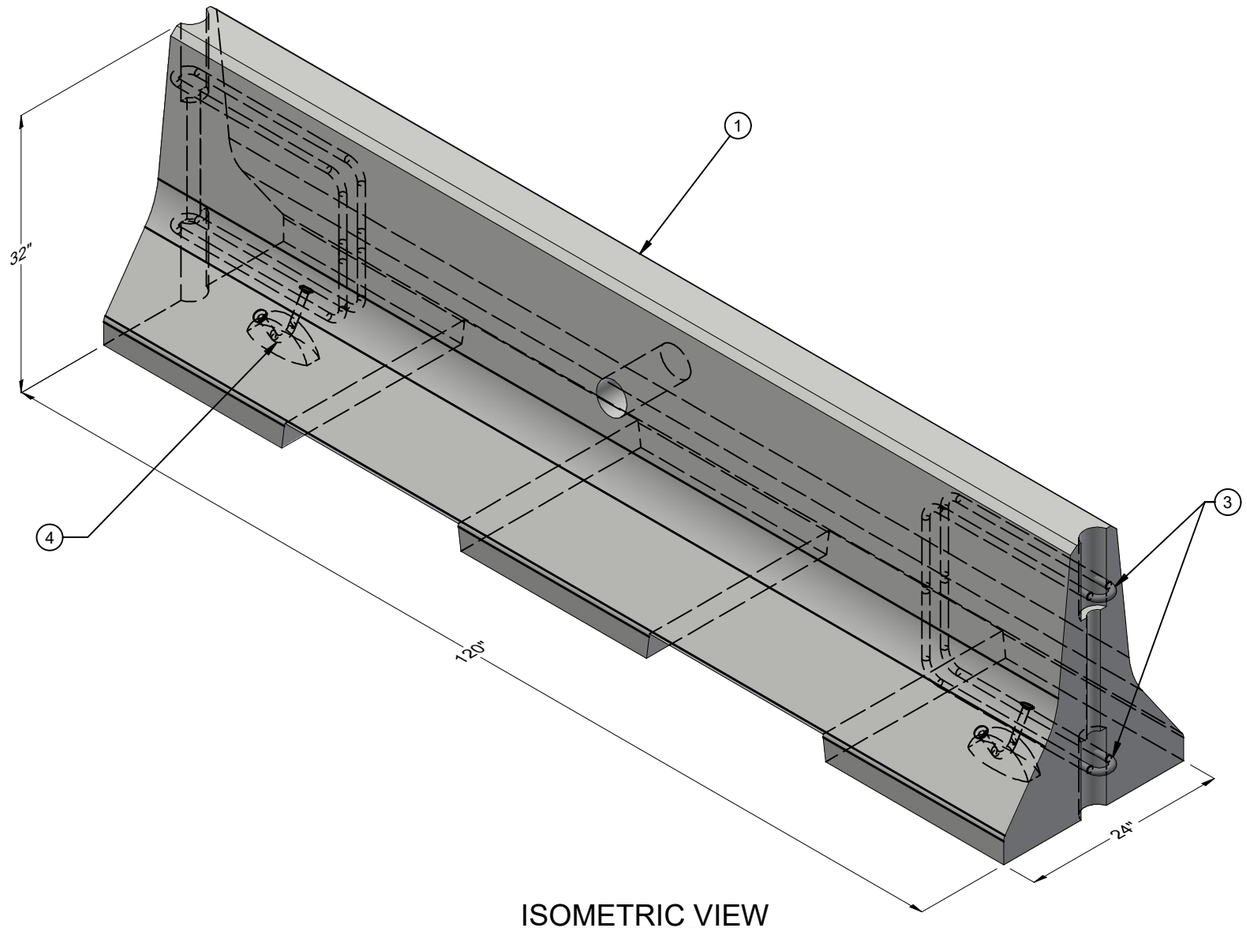

ISOMETRIC VIEW

100013576.idw

LIFTING NOTES
■ DEMOLDING: THIS CONCRETE PRODUCT IS DESIGNED TO BE LIFTED AT 2500 PSI WITH 2 LIFT CONNECTIONS EQUALLY LOADED TO 2 LIFTING POINTS WITH A SLING ANGLE BETWEEN 60° AND 90°, MEASURED FROM HORIZONTAL.

BURY DEPTH:	N/A to N/A		
WATER LEVEL:	N/A	WEIGHT:	3829.62 Lbs
DESIGN SPEC:	N/A	LOADING SPEC:	N/A
REINFORCEMENT TYPE:	Rebar	LIFTING TYPE:	A-Anchor

JENSEN PRECAST EST. 1968

WWW.JENSENPRECAST.COM

©2018 Jensen Precast- All rights reserved.
All materials appearing as Jensen Precast documents and the like are proprietary work product and are protected under U.S. copyright and other laws.
Unless in conjunction with business conducted with Jensen Precast, any use of Jensen Precast work product without express, written consent is prohibited, and recipient is prohibited from distributing any and all work product to non-approved third parties under penalty of civil action.

REVISION HISTORY

REV	DESCRIPTION	DATE	BY
1	INITIAL RELEASE 2008-20130-COR ECR [35027] K RAIL	3/9/2022	MM
2	SCUPPER HEIGHT INCREASED TO 3" - REVISED CAGE	08/07/2023	EDC
3			

DESCRIPTION: BARRIER 10FT TYPE K W/ FORKLIFT POCKETS - 10K-4 - NON-D.O.T. CASTING LAYOUT			REV: B-3
PART NUMBER:	100013576	DRAWN BY: E CAMERON	SHEET: 1 OF 2
CREATED:	11/14/2018	MODIFIED: 8/7/2023	

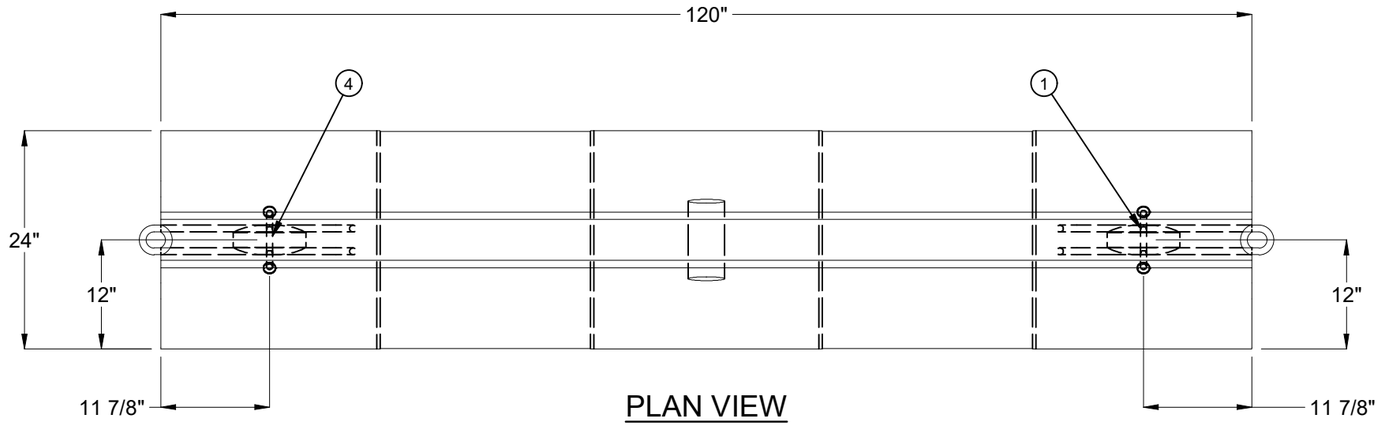

PLAN VIEW

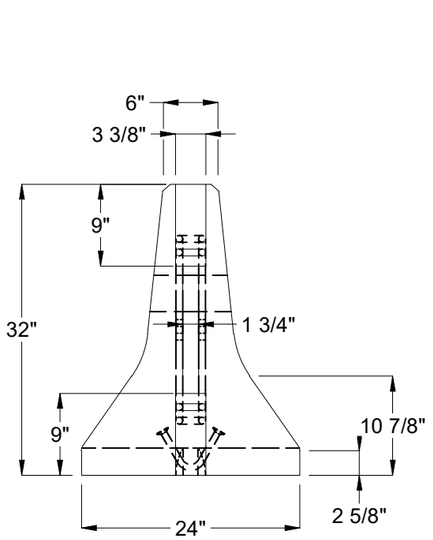

LEFT END VIEW

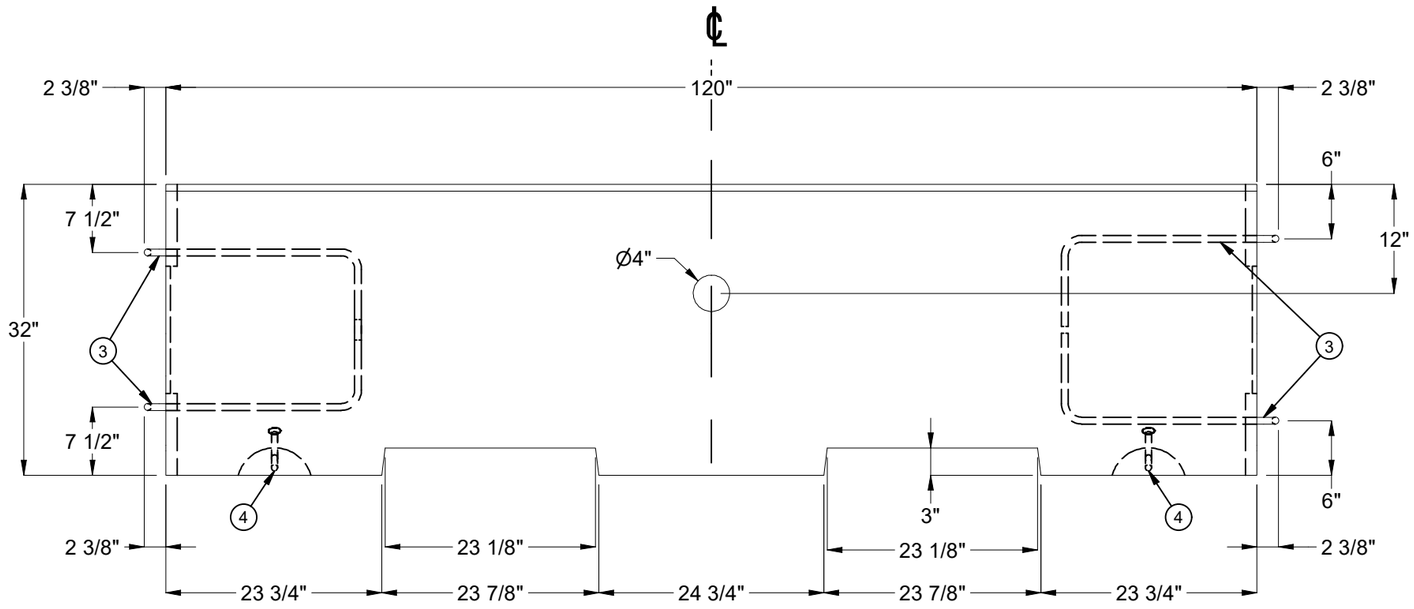

ELEVATION

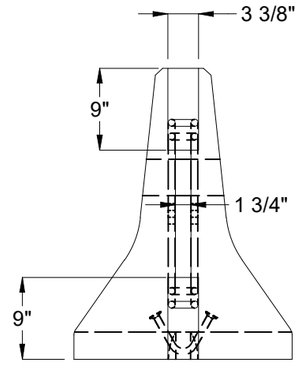

RIGHT END VIEW

BURY DEPTH:	N/A to N/A		
WATER LEVEL:	N/A	WEIGHT:	3829.62 Lbs
DESIGN SPEC:	N/A	LOADING SPEC:	N/A
REINFORCEMENT TYPE:	Rebar	LIFTING TYPE:	A-Anchor

JENSEN PRECAST EST. 1968

WWW.JENSENPRECAST.COM

©2018 Jensen Precast- All rights reserved.
All materials appearing as Jensen Precast documents and the like are proprietary work product and are protected under U.S. copyright and other laws.
Unless in conjunction with business conducted with Jensen Precast, any use of Jensen Precast work product without express, written consent is prohibited, and recipient is prohibited from distributing any and all work product to non-approved third parties under penalty of civil action.

DESCRIPTION:	BARRIER 10FT TYPE K W/ FORKLIFT POCKETS - 10K-4 - NON-D.O.T. CASTING DRAWING		REV: B-3
PART NUMBER:	100013576	DRAWN BY:	E CAMERON
CREATED:	11/14/2018	MODIFIED:	8/7/2023
			SHEET: 2 OF 2

100013576.idw