NOTES
■ ALL PARTS TO BE STENCILED: MFG DATE / JOB NUMBER / PRODUCT ID / WEIGHT.
■ 1/2" THREADED BRASS BONDING INSERT "WELDED TO REBAR" "GND" SHOULD BE STENCILED IN RED LETTERS (1 1/2" MIN. - 2" MAX.)

BILL OF MATERIALS

ITEM	UNIT QTY	QTY	PART NUMBER	DESCRIPTION
1	304.784 ft^3	304.784 ft^3	100037806	CONCRETE 6000 PSI WETCAST #87 SCC W/ FLY ASH 5%-6% AIR SDGE FONT
2	1	4	100002963	ANCHOR EYE DOGBONE P53 8T X 7-1/16" GALV
3	1	4	100028399	ANCHOR SWIFT LIFT TENSION BAR 8T 2500PSI DAYTON P60
4	1	4	100002880	ANCHOR DOGBONE P52 8T X 6-3/4" GALV
5	1	32	100005936	TERMINATOR DUCT WITH SEAL 5IN T5001
6	1	10	100005939	PULL IRON OFFSET WITH REBAR .875DIA 4.5H GALV LADWP
7	1	2	100005932	INSERT GROUND BRONZE BOTTLE ROCKET 1/2-13 UNC WITH 11IN COPPER ROD 12H69
8	1	1	300129208	REINFORCING MAT 300129208

100013480.idw

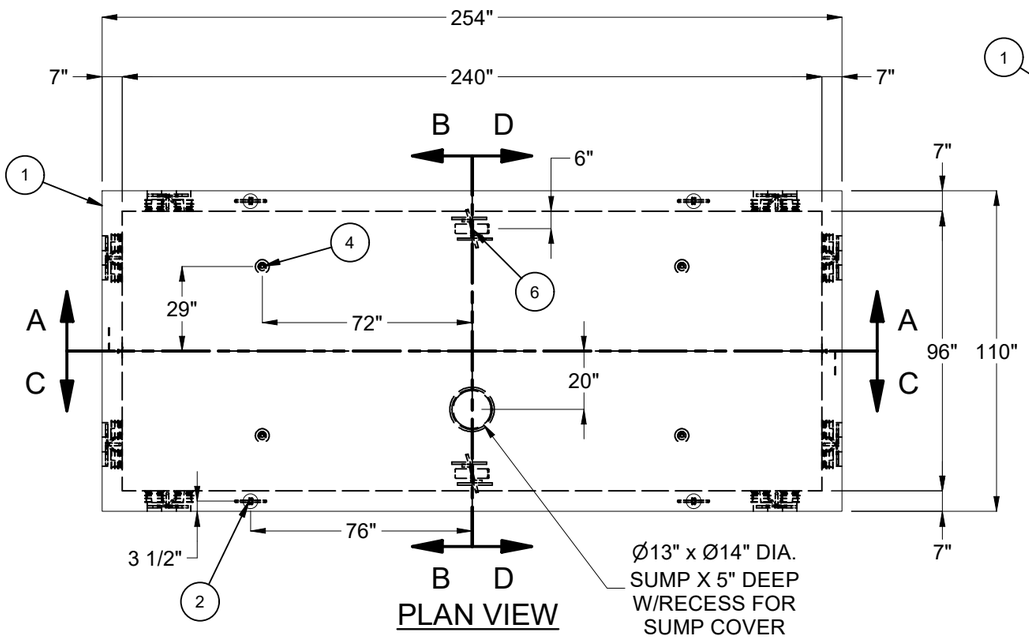

PLAN VIEW

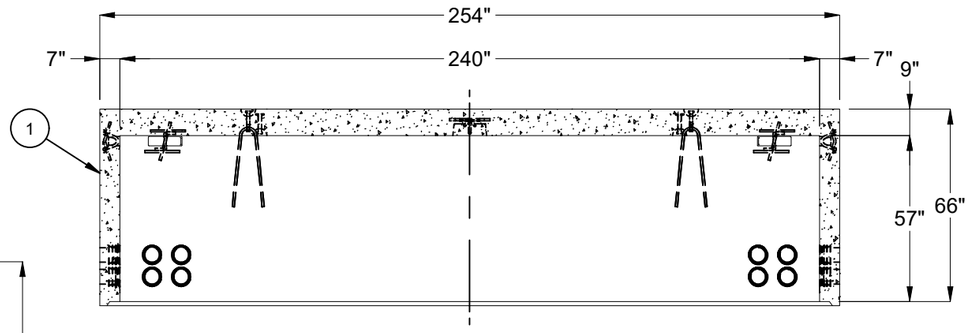

SECTION A-A

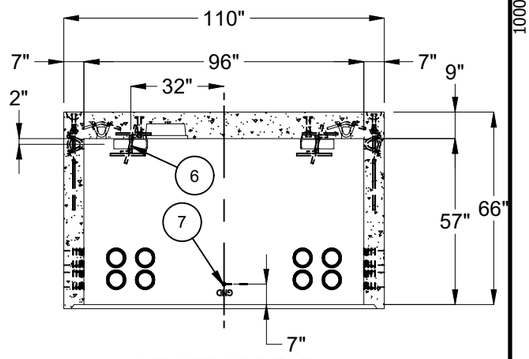

SECTION B-B

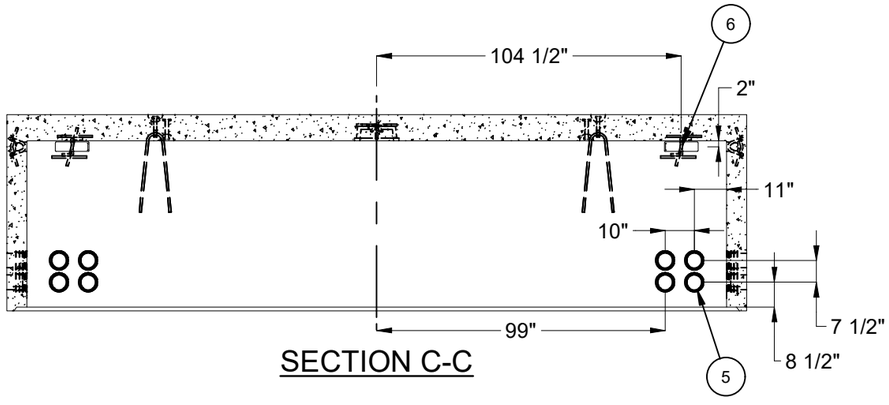

SECTION C-C

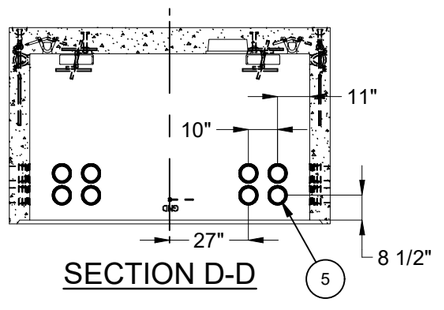

SECTION D-D

LIFTING NOTES
■ DEMOLDING: THIS CONCRETE PRODUCT IS DESIGNED TO BE LIFTED AT 2,500 PSI WITH 4 LIFT CONNECTIONS EQUALLY LOADED TO 4 LIFTING POINTS AT A MINIMUM 90° SLING ANGLE, MEASURED FROM HORIZONTAL.
■ INSTALLATION: THIS CONCRETE PRODUCT IS DESIGNED TO BE LIFTED AT 5,500 PSI WITH 4 LIFT CONNECTIONS EQUALLY LOADED TO 4 LIFTING POINTS AT A MINIMUM 60° SLING ANGLE, MEASURED FROM HORIZONTAL.

REVISION HISTORY			
REV	DESCRIPTION	DATE	APPROVED
C-1	ADDED NOTE & DETAIL E - WELD GND INSERT TO REBAR	5/26/2023	

BURY DEPTH:	5.5' - 9.5' to Top		
WATER LEVEL:	3.0'	APPROX. WEIGHT:	45919.88 Lbs
DESIGN SPEC:	ASTM C857,ACI 318	LOADING SPEC:	A-16 (AASHTO HS20-44)
REINFORCEMENT TYPE:	Rebar	LIFTING TYPE:	Dogbone

JENSEN PRECAST EST. 1968

WWW.JENSENPRECAST.COM

©2023 Jensen Precast- All rights reserved.
All materials appearing as Jensen Precast documents and the like are proprietary work product and are protected under U.S. copyright and other laws.
Unless in conjunction with business conducted with Jensen Precast, any use of Jensen Precast work product without express, written consent is prohibited, and recipient is prohibited from distributing any and all work product to non-approved third parties under penalty of civil action.

DESCRIPTION:	Vault 96240x57 Rect. Bottom Section Terminators Sump SDGE 3326 Distribution Vault CASTING LAYOUT		REV: C-1
PART NUMBER:	100013480	DRAWN BY:	J. Prado
CREATED:	7/18/2019	MODIFIED:	5/26/2023
			SHEET: 1 OF 1