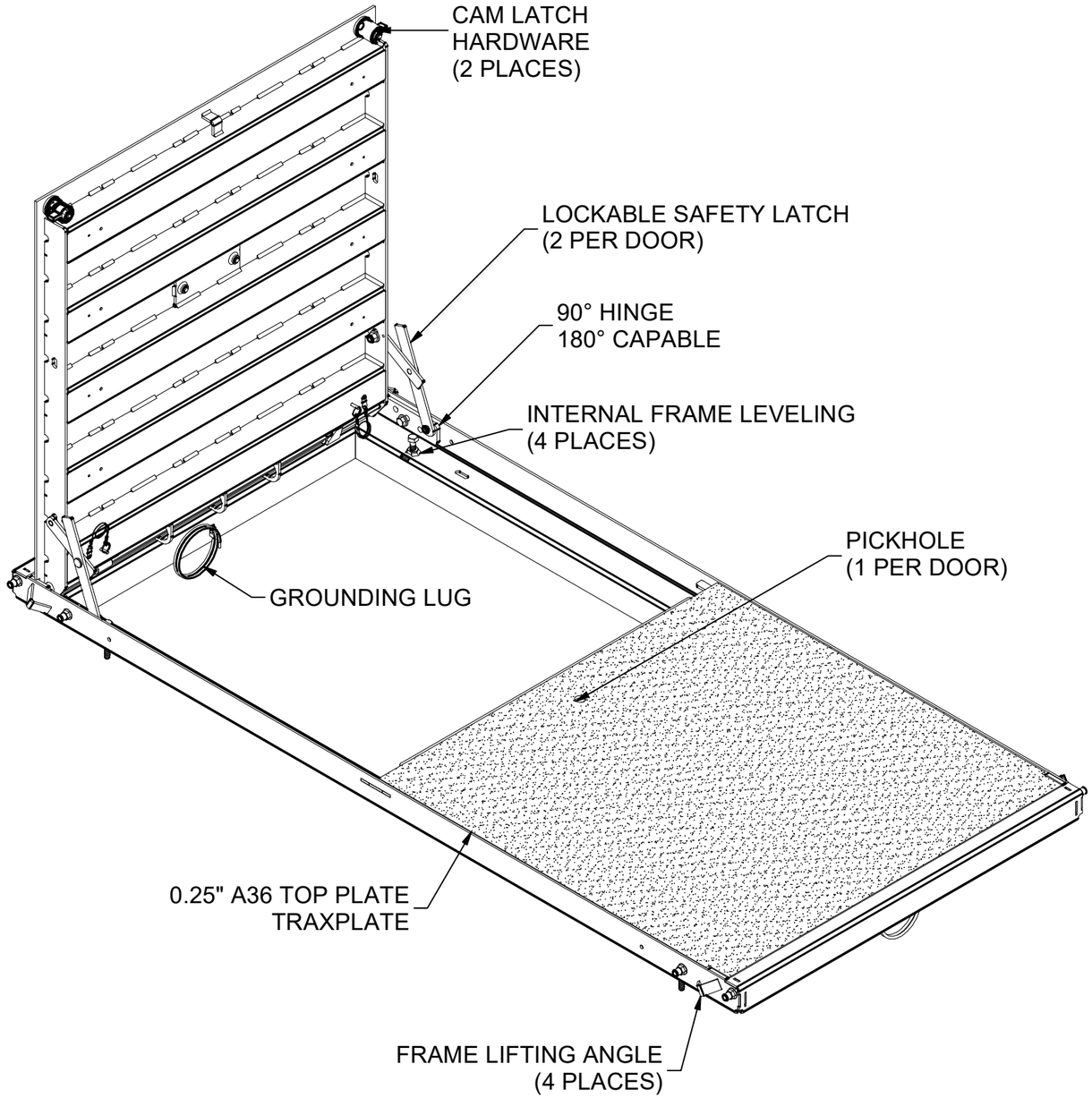

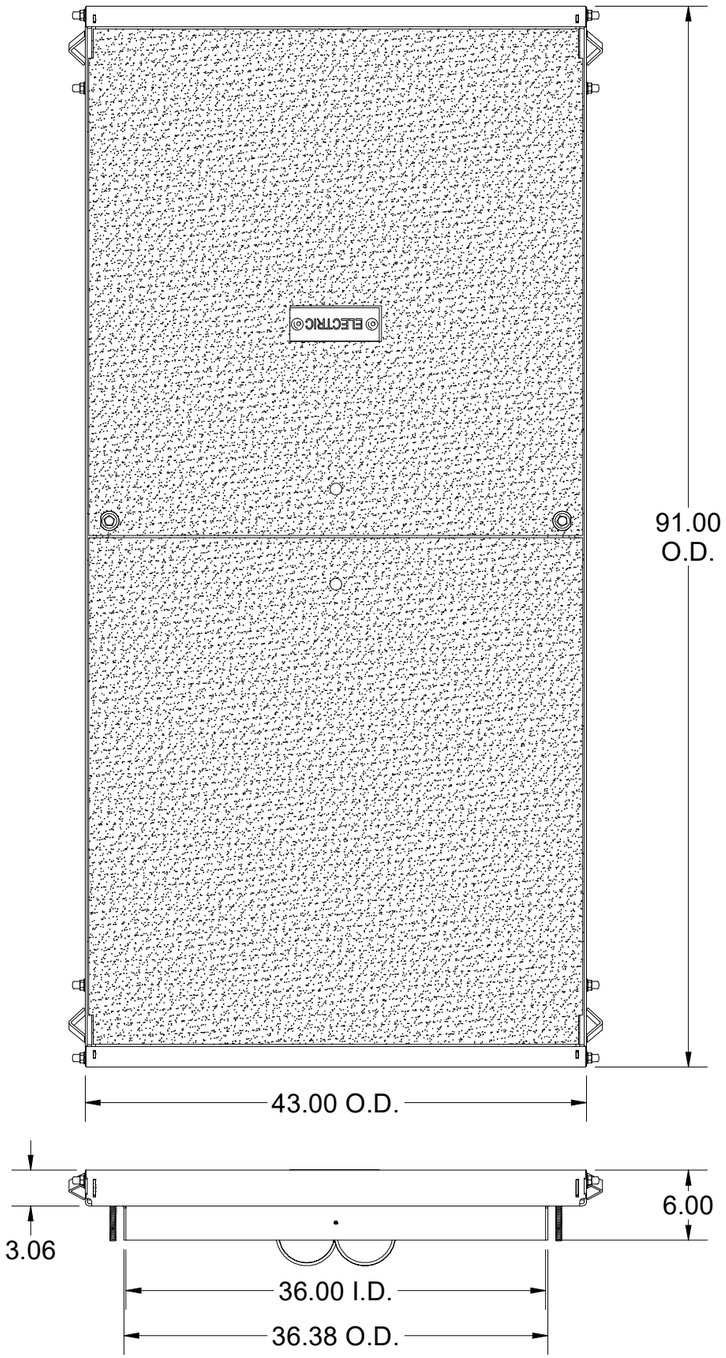

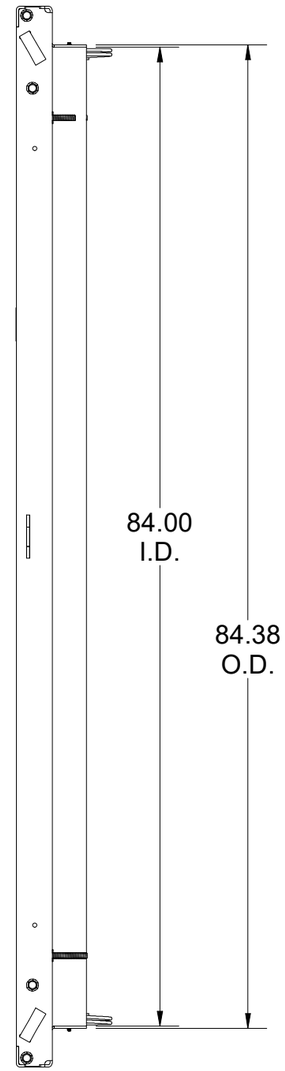

100013476.idw

DESIGNED FOR ROBOT WELDING

LOADING CRITERIA: ASTM C1802 Load Level 04

16,000 lb load on 10" x 20" footprint, without impact restricted to parking spaces and areas within close proximity of roadways.

SURFACE:	TraxPlate™	FINISH:	Galvanized
WEIGHT:	589.81 lbs	MARKING:	None

Infrastructure
JENSEN
527 Dunn Circle, Sparks, NV 89431
775-352-2716 FAX: 755-358-8127
JENSENMETALTECH.COM

©2026 Jensen Infrastructure - All rights reserved.
All materials appearing as Jensen Infrastructure documents and the like are proprietary work product and are protected under U.S. copyright and other laws. Unless in conjunction with business conducted with Jensen Infrastructure , any use of Jensen Infrastructure work product without express, written consent is prohibited, and recipient is prohibited from distributing any and all work product to non-approved third parties under penalty of civil action.
This product shall only be produced in a Jensen Infrastructure facility.

DESCRIPTION:	CAS2-3785-AH4-TRX-G-CL-LV-NVE-OH06-(RS-82) 37x85 Standard Cover Assembly (ASTM C1802 Load Level 04, Steel, Hinged, Pickhole, TraxPlate™, Galvanized, N/A, NV Energy (RS-82)) 06	REV:	C-1-2
PART NUMBER:	100013476	DRAWN BY:	M. Bouchard
CREATED:	11/22/2019	MODIFIED:	8/28/2026
		SHEET:	1

BILL OF MATERIALS

ITEM	UNIT QTY	QTY	PART NUMBER	DESCRIPTION	PART NAME
1	1	1	200032679	FAS-3785-AH4-R-GR-LV-NVE-OH06-(RS-82)	200032679
2	1	1	200032671	DAS2-B-3785-H4-TRX-R-CL-LV-NVE-(RS-82)	200032671
3	1	1	200032677	DAS2-T-3785-H4-TRX-R-CL-LV-NVE-(RS-82)	200032677
4	1	4	100007869	BOLT SHCS 1/2-13 X 1-3/4 SS	100007869
5	1	4	100003823	Hex Bolt 1/2-13 UNC ZINC - PT - 1.5"	100003823
6	1	2	100007729	HEX NUT SLOTTED CASTLE HEAD 1/2-13 SS	100007729
7	1	2	100007857	NUT FINGER 1/2-13 BRASS	100007857
8	1	2	100007915	SPRING COMPRESSION 055 X 5/8 X 7/8 LONG	100007915
9	1	2	100007918	Cotter Pin 0.094x1.25" 18-8SS	100007918
10	1	8	100007939	CAP VINYL .467 X 1/2	100007939
11	1	4	100007933	SAFETY LATCH ASSY FOR UNI AND 90 D HINGE	100007933
12	1	4	100007492	HEX NUT NYLOCK - 1/2-13 UNC - GR5 - ZINC	100007492
13	1	4	100007924	LANYARD 3/64 W/PIN COATED SS	100007924
14	1	4	100007882	Rivet Blind Grip .1875" Large Domed Head Range-0.376-0.5" Steel	100007882
15	1	2	100007660	Hinge Assembly, Right, 1/2, Steel	100007660
16	1	2	100007659	Hinge Assembly, Left, 1/2, Steel	100007659
17	1	2	100007733	BOLT HEX SOCKET FLAT COUNTERSUNK HEAD 1/2-13 UNC 1 GR 5 ZINC-PLATED	100007733
18	1	12	100011418	WASHER FLAT 1/2 NARROW ZINC	100011418
19	36.000 in	72.000 in	100007936	WIRE THN STRANDED COPPER GRN COAT #6	100007936
20	1	2	100007917	CHAIR LUG 1/4-20 ALUM	100007917
21	1	2	100007671	SPRING MOUNT ASSY .500	100007671
22	1	8	100007873	BOLT SOCKET CAP - 3/8-16 UNC - 1.25 - ZINC	100007873
23	1	8	100007859	RIVET NUT 3/8-16 FLAT KNURLED	100007859
24	1	4	100007755	HEX COIL BOLT 1/2 x 3-1/2 SS	100007755
25	1	2	100007681	Offset Sprint Mount, 1/2"	100007681
26	1	4	100007727	TORSION HEX ROD .5 x 36in RAW	100007727
27	1	4	100007876	Bolt Shoulder Socket Head - 3/8-16 UNC - SD-0.5" - SL-0.3125" - Grade 5 - Zinc	100007876
28	1	8	100026256	LOW-STRENGTH STEEL FLANGE NUT, 1/2" - 13 THREAD SIZE	100026256
29	1	2	100042340	Zinc-Plated Steel Thread-Cutting Screws for Metal, External Hex Drive, 1/4-20 Thread Size, 1/2" Long	100042340
30	1	2	100007749	BOLT PENTA 1/2-13 UNC 0.875 HEAD 2.25L SS DRILLED	100007749
31	1	1	100007101	NAME PLATE STEEL - ELECTRIC	100007101

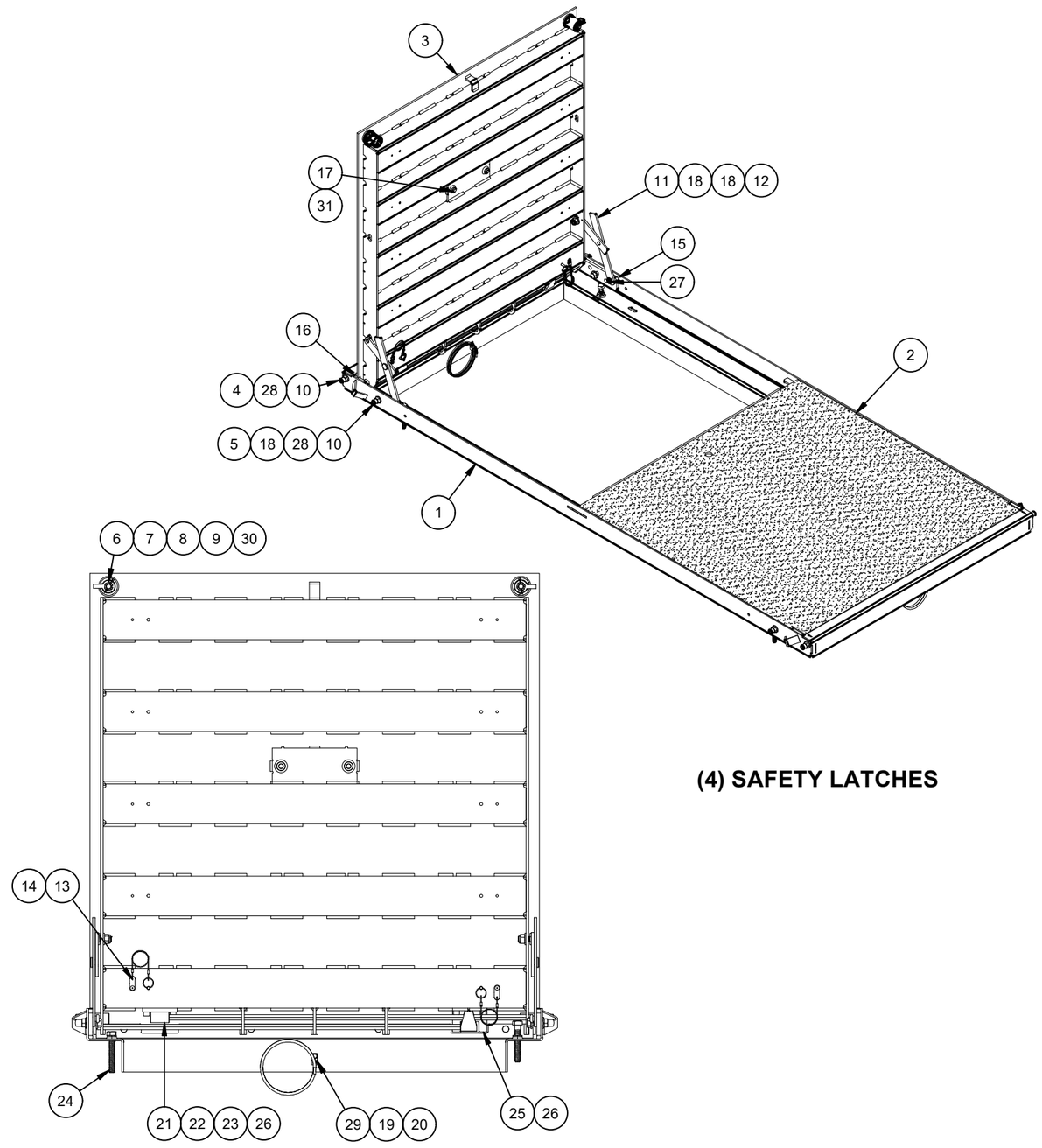

(4) SAFETY LATCHES

100013476.idw

REVISION HISTORY	
DESCRIPTION	DATE
MADE FRAME 3.06" PER SHOP REQUEST, MADE MINOR DESIGN IMPROVEMENTS TO FRAME, UPDATED LAP BAR, ADDED 200100755 & 100042340, CHANGED TO 1 STIFFENER TYPE TO MATCH SOLIDWORKS, INCREASED STIFFENER THICKNESS & UPDATED WELDS / ADDED INDICATORS	5/29/2025
SHOP REQUEST TO REVERT TO OLD STIFFENER THICKNESS AND WELD SIZE/SPACING	9/25/2025
REVISED REAR LAP BAR TO ADDRESS WARPING ISSUES. MADE NAMEPLATE SLOT LARGER TO ACCOMMODATE GALV. REPLACED NAMEPLATE BACKING PLATE TO MATCH RS-80	4/9/2026
ADDED GUSSETS TO REAR LAP BAR TO ADDRESS TOP PLATE WARPING	7/21/2026
REVISED TO PENTA HEAD HARDWARE AND 'ELECTRIC' NAMEPLATE	8/28/2026

MATERIAL FINISH: Galvanized

MATERIAL SURFACE: TraxPlate™

Infrastructure JENSEN

527 Dunn Circle, Sparks, NV 89431
775-352-2716 FAX: 755-358-8127
JENSENMETALTECH.COM

©2026 Jensen Infrastructure - All rights reserved.
All materials appearing as Jensen Infrastructure documents and the like are proprietary work product and are protected under U.S. copyright and other laws. Unless in conjunction with business conducted with Jensen Infrastructure , any use of Jensen Infrastructure work product without express, written consent is prohibited, and recipient is prohibited from distributing any and all work product to non-approved third parties under penalty of civil action.
This product shall only be produced in a Jensen Infrastructure facility.

PART NUMBER & DESCRIPTION: 100013476 CAS2-3785-AH4-TRX-G-CL-LV-NVE-OH06-(RS-82)

REV: C-1-2

WEIGHT: 589.81 Lbs

DRAWN BY: M. Bouchard

CREATED: 11/22/2019

MODIFIED: 8/28/2026

SHEET: 2

BURN LIST - BOM

PART NAME	ITEM QTY	PART NUMBER	DESCRIPTION	STOCK NUMBER	MATERIAL	MASS	SHEET
200032672	10	100007840	Door Component Steel Channel	100007840	SHT STL GR80 GA-11 SM-HR RAW .1196	11.402 lbmass	08
200032675	1	100007735	Door Component Steel Plate, Bottom	100007735	STL ASTM A36 SM-HRPO RAW .250	130.592 lbmass	09
200032676	4	100007735	Door Component Steel Side Bar	100007735	STL ASTM A36 SM-HRPO RAW .250	7.008 lbmass	10
200032678	1	100007735	Door Component Steel Plate, Top Nameplate	100007735	STL ASTM A36 SM-HRPO RAW .250	128.588 lbmass	11
200032680	2	100007734	Frame Component Steel Frame End, Adjustable	100007734	STL ASTM A36 SM-HRPO 60X120 RAW .1875	22.379 lbmass	12
200032681	2	100007734	Frame Component Steel Frame Side, Adjustable	100007734	STL ASTM A36 SM-HRPO 60X120 RAW .1875	42.001 lbmass	13
200032693	2	100007735	3785 GAP FILLER	100007735	STL ASTM A36 SM-HRPO RAW .250	3.276 lbmass	14
200087247	1	100007735	Door Component Steel Lap Bar 37in, 2.5" Stiffener Offset	100007735	STL ASTM A36 SM-HRPO RAW .250	4.966 lbmass	15
200091824	1	100007735	NAME PLATE BACKING PLATE	100007735	STL ASTM A36 SM-HRPO RAW .250	1.876 lbmass	16
200122232	6	100007735	Rear Lap Bar Gusset	100007735	STL ASTM A36 SM-HRPO RAW .250	0.206 lbmass	17

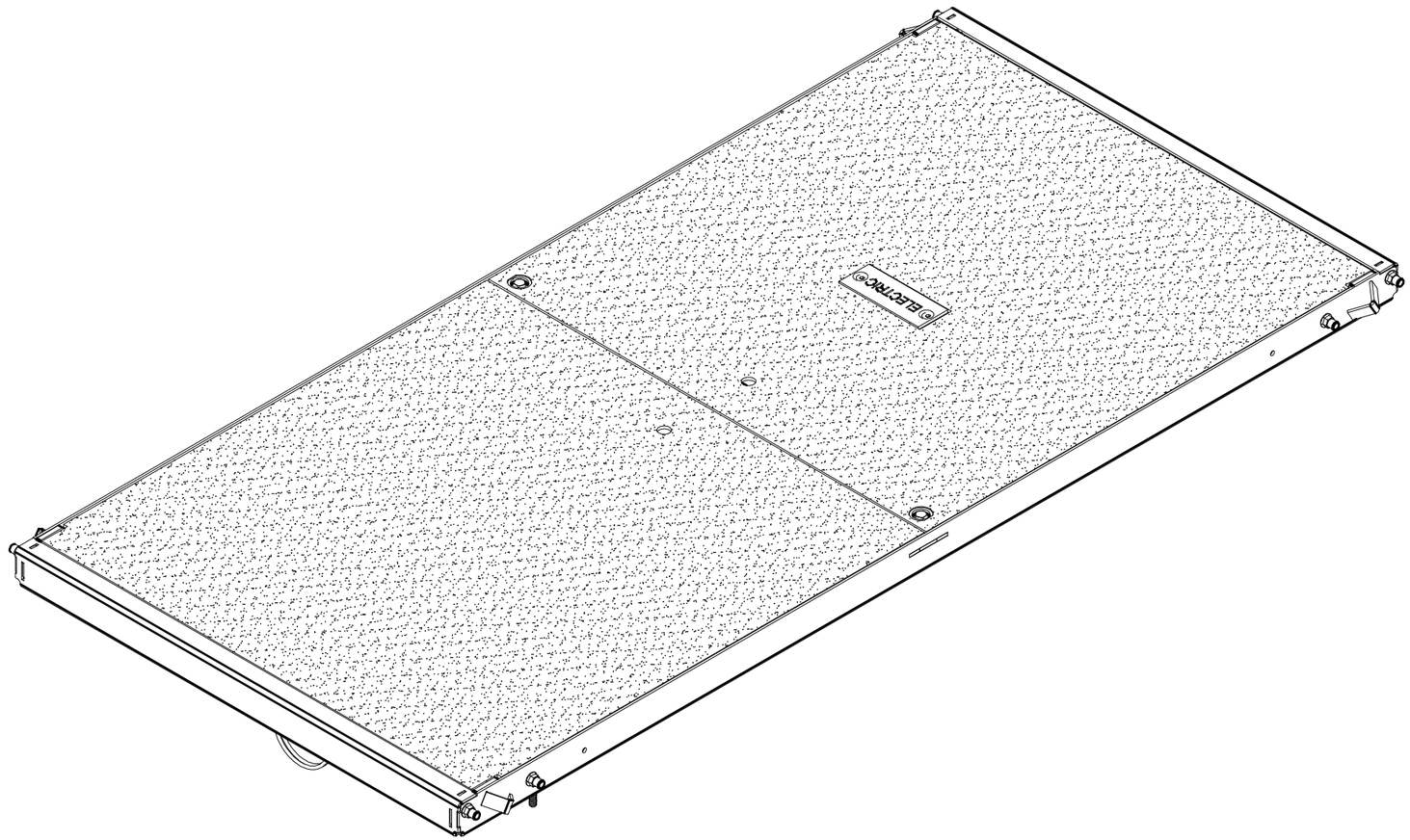

MATERIAL FINISH: Galvanized	Infrastructure JENSEN 527 Dunn Circle, Sparks, NV 89431 775-352-2716 FAX: 755-358-8127 *JENSENMETALTECH.COM*	©2026 Jensen Infrastructure - All rights reserved. All materials appearing as Jensen Infrastructure documents and the like are proprietary work product and are protected under U.S. copyright and other laws. Unless in conjunction with business conducted with Jensen Infrastructure , any use of Jensen Infrastructure work product without express, written consent is prohibited, and recipient is prohibited from distributing any and all work product to non-approved third parties under penalty of civil action. This product shall only be produced in a Jensen Infrastructure facility.	PART NUMBER & DESCRIPTION: 100013476 CAS2-3785-AH4-TRX-G-CL-LV-NVE-OH06-(RS-82)	REV: C-1-2
MATERIAL SURFACE: TraxPlate™			WEIGHT: 589.81 Lbs CREATED: 11/22/2019	DRAWN BY: M. Bouchard MODIFIED: 8/28/2026	SHEET: 3

100013476.idw

CUT LIST - BOM

PART NAME	ITEM QTY	BASE QTY	QTY	DESCRIPTION	PART NUMBER	MASS	SHEET
100007936	2	36 in	72.000 in	WIRE THN STRANDED COPPER GRN COAT #6	100007936	0.507 lbmass	

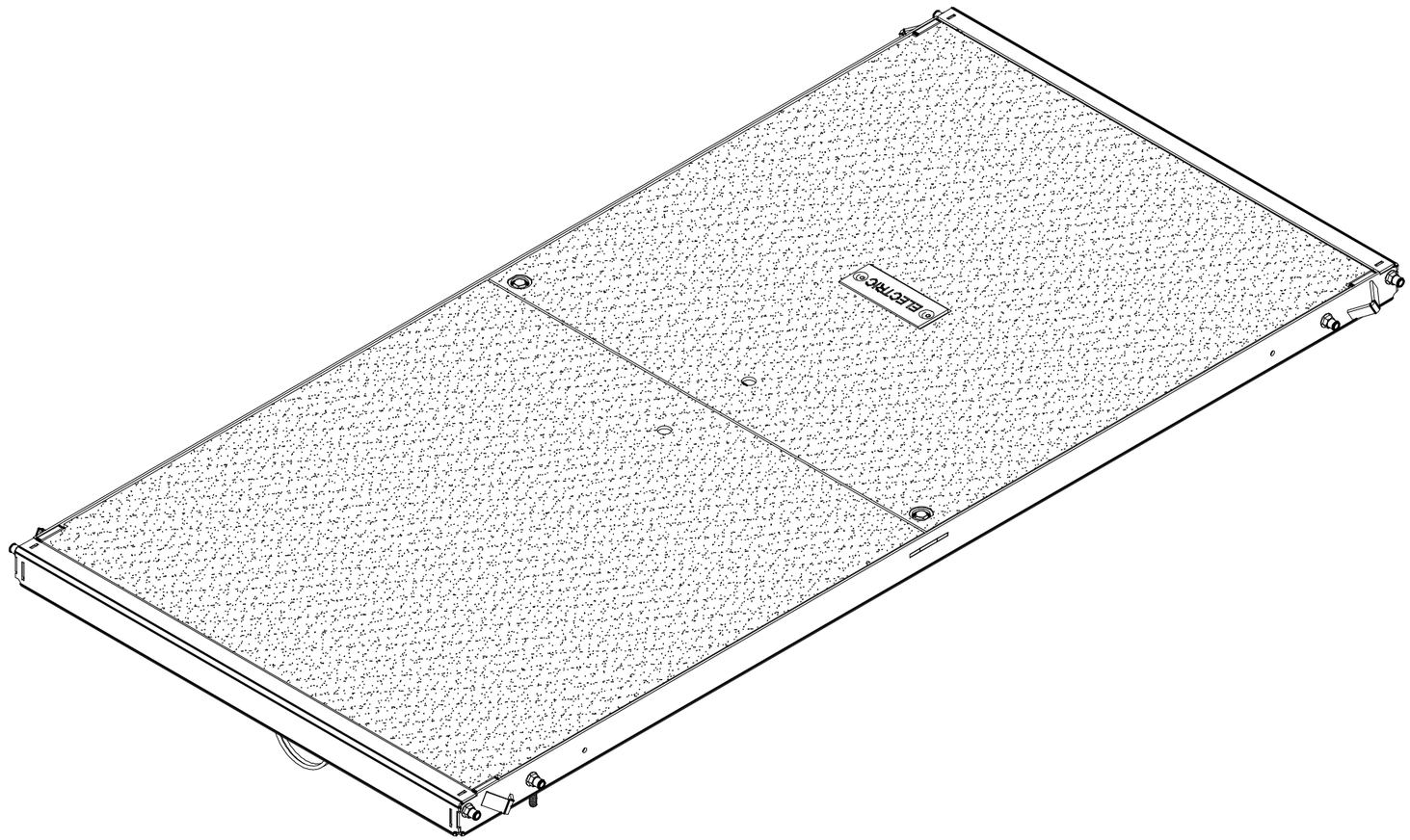

100013476.idw

MATERIAL FINISH: Galvanized

MATERIAL SURFACE: TraxPlate™

Infrastructure JENSEN
527 Dunn Circle, Sparks, NV 89431
775-352-2716 FAX: 755-358-8127
JENSENMETALTECH.COM

©2026 Jensen Infrastructure - All rights reserved.
All materials appearing as Jensen Infrastructure documents and the like are proprietary work product and are protected under U.S. copyright and other laws. Unless in conjunction with business conducted with Jensen Infrastructure , any use of Jensen Infrastructure work product without express, written consent is prohibited, and recipient is prohibited from distributing any and all work product to non-approved third parties under penalty of civil action.
This product shall only be produced in a Jensen Infrastructure facility.

PART NUMBER & DESCRIPTION: 100013476
CAS2-3785-AH4-TRX-G-CL-LV-NVE-OH06-(RS-82)

REV: C-1-2

WEIGHT: 589.81 Lbs

DRAWN BY: M. Bouchard

CREATED: 11/22/2019

MODIFIED: 8/28/2026

SHEET: 4

BILL OF MATERIALS

ITEM	ITEM QTY	QTY	PART NUMBER	DESCRIPTION	PART NAME
1	2	84.003 lbmass	100007734	Frame Component Steel Frame Side, Adjustable	200032681
2	2	44.759 lbmass	100007734	Frame Component Steel Frame End, Adjustable	200032680
3	4	4	200018691	FRAME BOLT DOUBLER SLOT	200018691
4	2	2	100007735	Frame Cam Latch Catch Plate - 1/4" A36, Dual Door, 0.8125" Overhang	200100755
5	4	4	100007641	FRAME LIFTING BRACKET	100007641
6	4	4	100007009	HEX COIL NUT 1/2-6 PLAIN	100007009

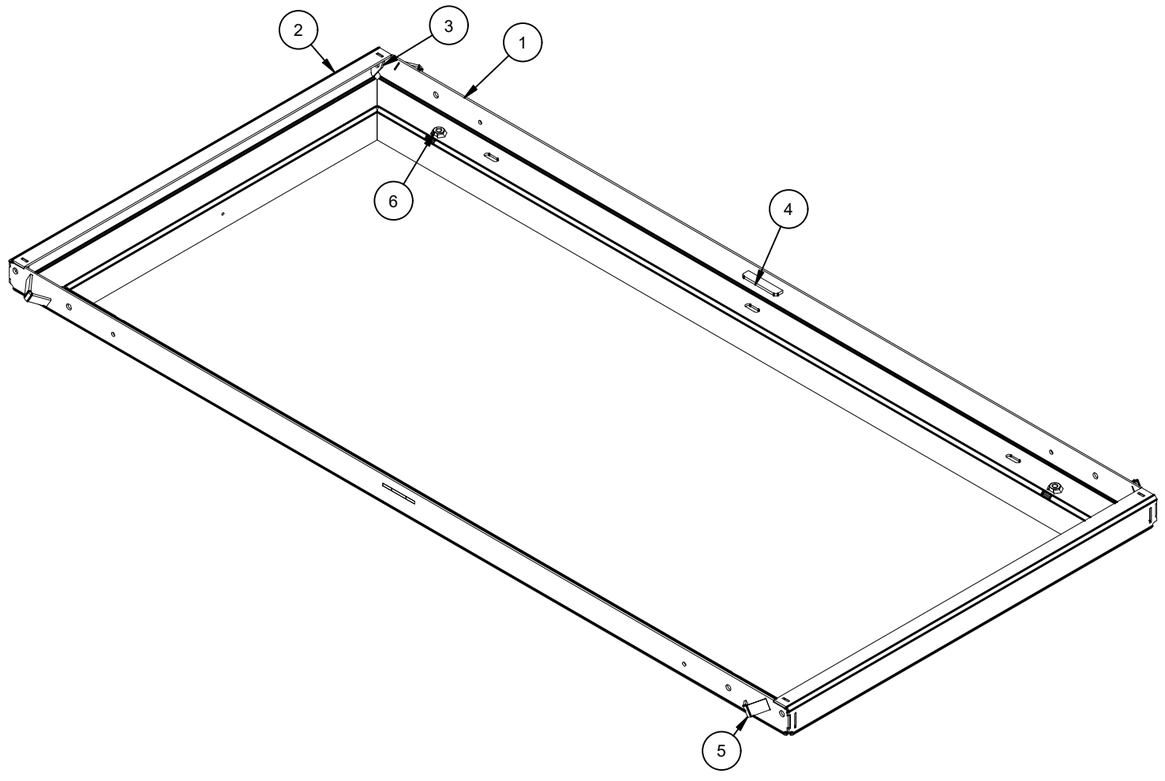

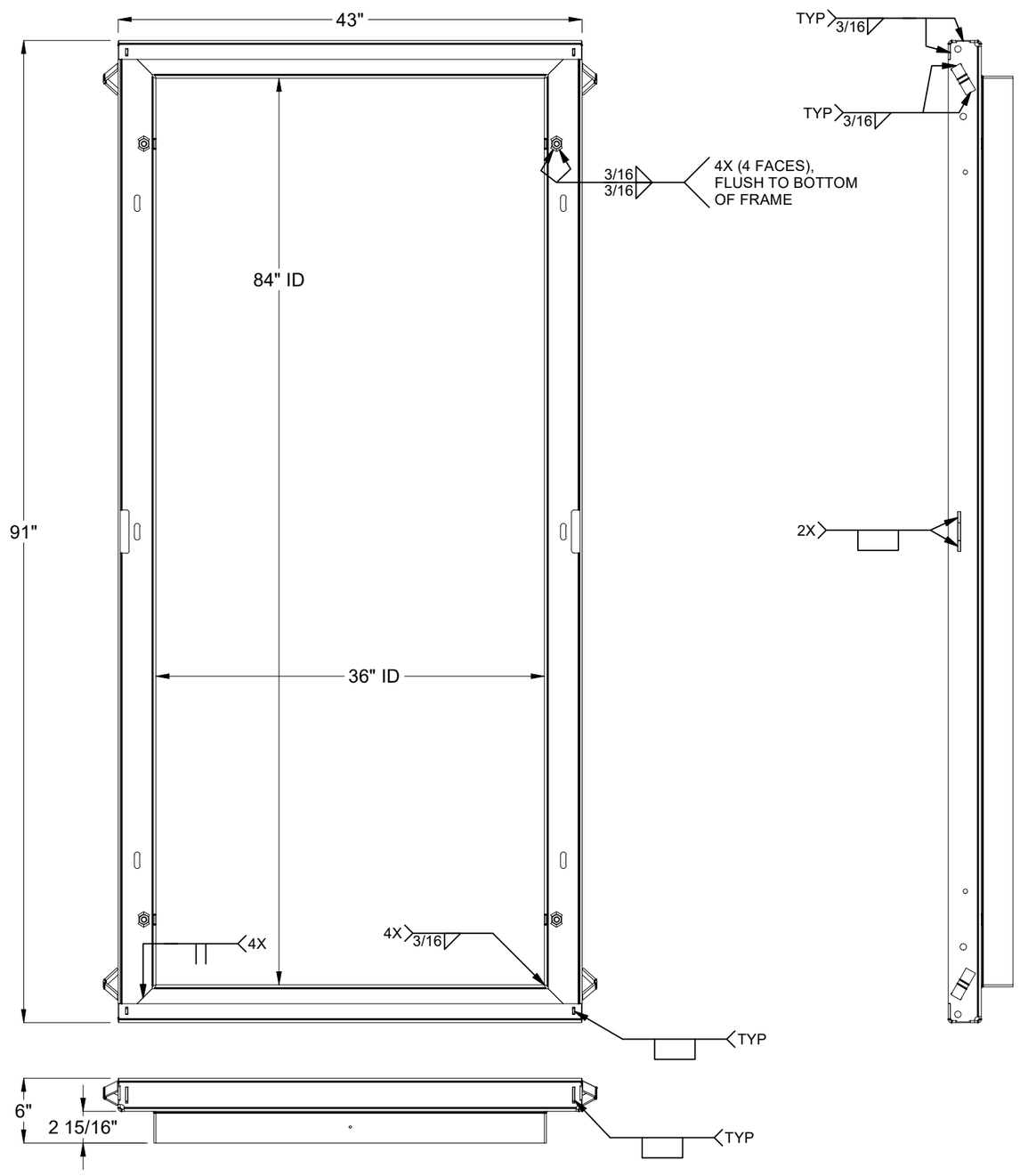

100013476.idw

MATERIAL FINISH: Raw	Infrastructure JENSEN 527 Dunn Circle, Sparks, NV 89431 775-352-2716 FAX: 755-358-8127 *JENSENMETALTECH.COM*	©2026 Jensen Infrastructure - All rights reserved. All materials appearing as Jensen Infrastructure documents and the like are proprietary work product and are protected under U.S. copyright and other laws. Unless in conjunction with business conducted with Jensen Infrastructure , any use of Jensen Infrastructure work product without express, written consent is prohibited, and recipient is prohibited from distributing any and all work product to non-approved third parties under penalty of civil action. This product shall only be produced in a Jensen Infrastructure facility.	PART NUMBER & DESCRIPTION: 200032679 FAS-3785-AH4-R-GR-LV-NVE-OH06-(RS-82)
MATERIAL SURFACE: Smooth			WEIGHT: 140 Lbs DRAWN BY: M. Bouchard CREATED: 11/22/2019 MODIFIED: 8/28/2026

REV: C-1-2

SHEET: 5

BILL OF MATERIALS

ITEM	ITEM QTY	QTY	PART NUMBER	DESCRIPTION	PART NAME
1	1	128.588 lbmass	100007735	Door Component Steel Plate, Top Nameplate	200032678
2	5	57.024 lbmass	100007840	Door Component Steel Channel	200032672
3	1	3.276 lbmass	100007735	3785 GAP FILLER	200032693
4	2	14.003 lbmass	100007735	Door Component Steel Side Bar	200032676
5	1	1.876 lbmass	100007735	NAME PLATE BACKING PLATE	200091824
6	3	0.618 lbmass	100007735	Rear Lap Bar Gusset	200122232
7	1	1	100007647	LIFTING BRACKET STEEL LEAF	100007647
8	2	2	100007970	CAM TOWER CAST STEEL	100007970
9	2	2	100007728	NUT SELF-CLINCH 1/2-13 S-0813-1 RAW	100007728

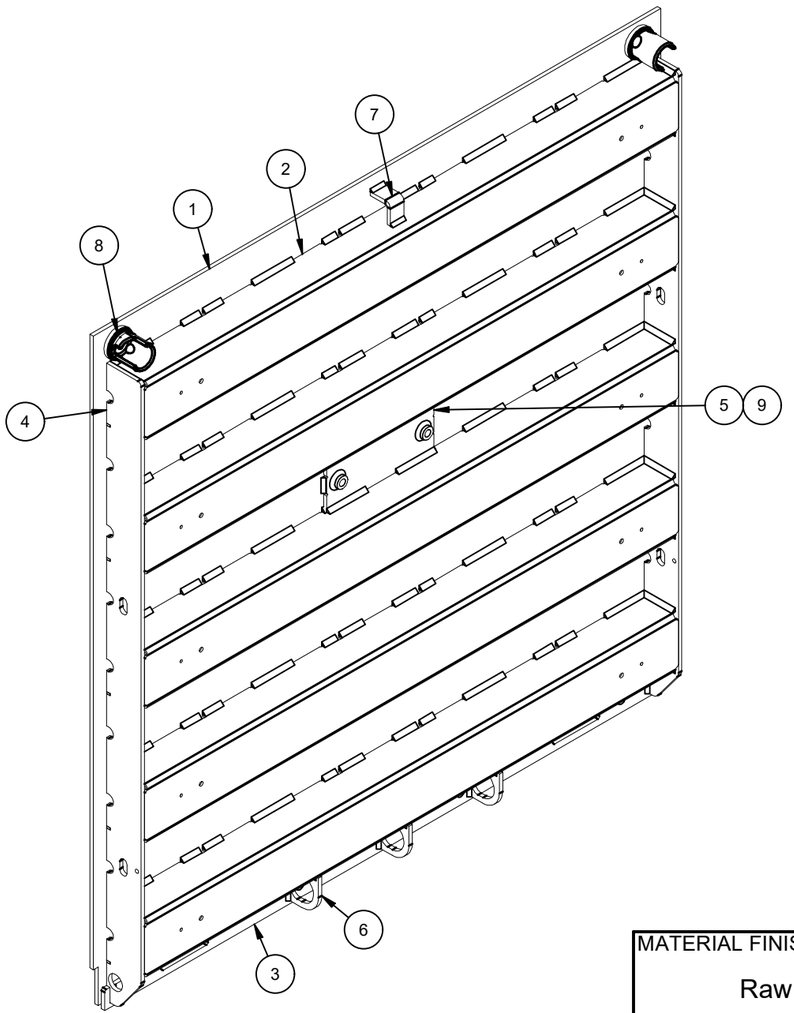

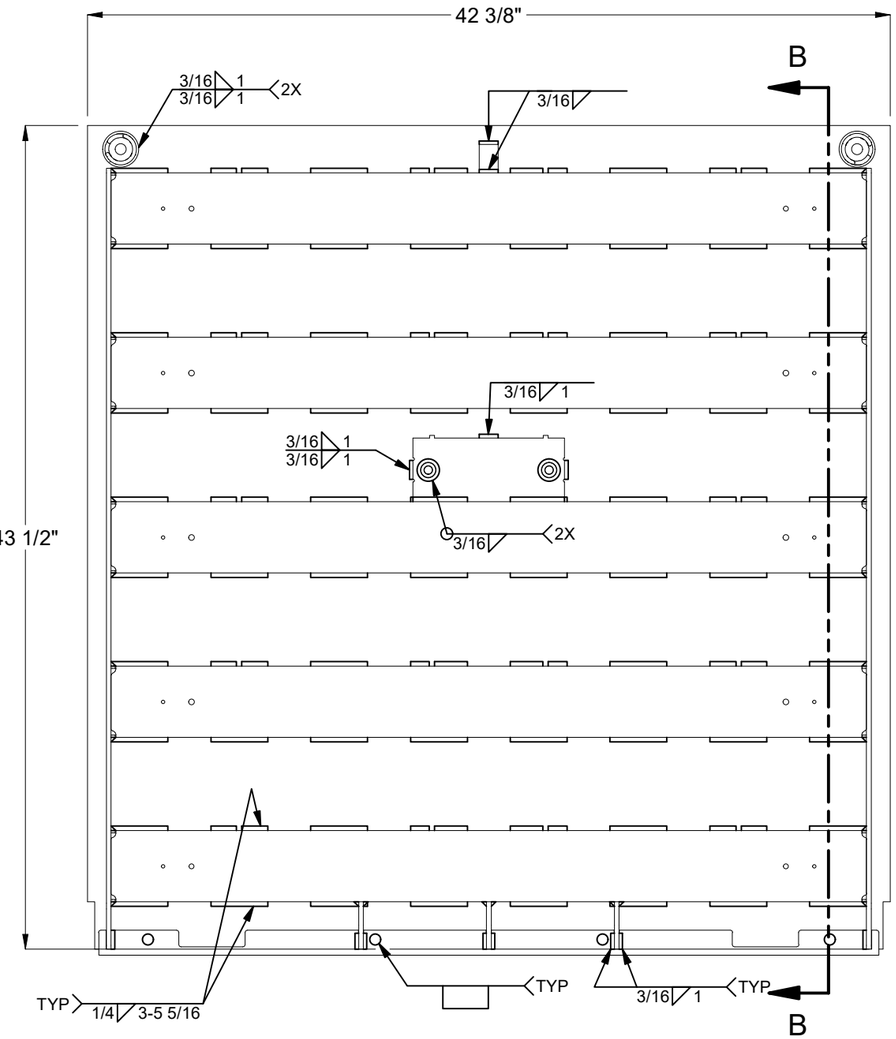

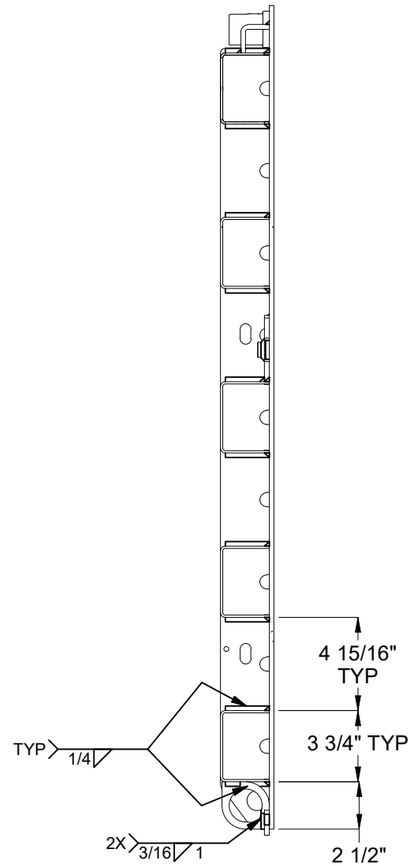

SECTION B-B

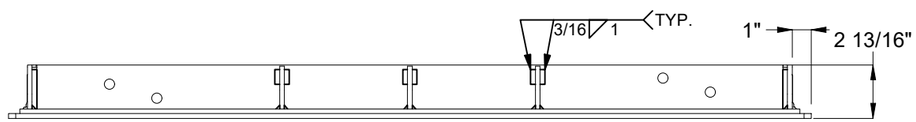

MATERIAL FINISH: Raw	Infrastructure JENSEN 527 Dunn Circle, Sparks, NV 89431 775-352-2716 FAX: 755-358-8127 *JENSENMETALTECH.COM*	©2026 Jensen Infrastructure - All rights reserved. All materials appearing as Jensen Infrastructure documents and the like are proprietary work product and are protected under U.S. copyright and other laws. Unless in conjunction with business conducted with Jensen Infrastructure , any use of Jensen Infrastructure work product without express, written consent is prohibited, and recipient is prohibited from distributing any and all work product to non-approved third parties under penalty of civil action. This product shall only be produced in a Jensen Infrastructure facility.	PART NUMBER & DESCRIPTION: 200032677 DAS2-T-3785-H4-TRX-R-CL-LV-NVE-(RS-82)	REV: C-1-2
MATERIAL SURFACE: TraxPlate™			WEIGHT: 209.56 Lbs CREATED: 11/22/2019	DRAWN BY: M. Bouchard MODIFIED: 8/28/2026	SHEET: 6

100013476.idw

BILL OF MATERIALS

ITEM	ITEM QTY	QTY	PART NUMBER	DESCRIPTION	PART NAME
1	1	130.592 lbmass	100007735	Door Component Steel Plate, Bottom	200032675
2	2	14.003 lbmass	100007735	Door Component Steel Side Bar	200032676
3	5	57.024 lbmass	100007840	Door Component Steel Channel	200032672
4	1	3.276 lbmass	100007735	3785 GAP FILLER	200032693
5	1	4.966 lbmass	100007735	Door Component Steel Lap Bar 37in, 2.5" Stiffener Offset	200087247
6	3	0.618 lbmass	100007735	Rear Lap Bar Gusset	200122232
7	1	1	100007647	LIFTING BRACKET STEEL LEAF	100007647

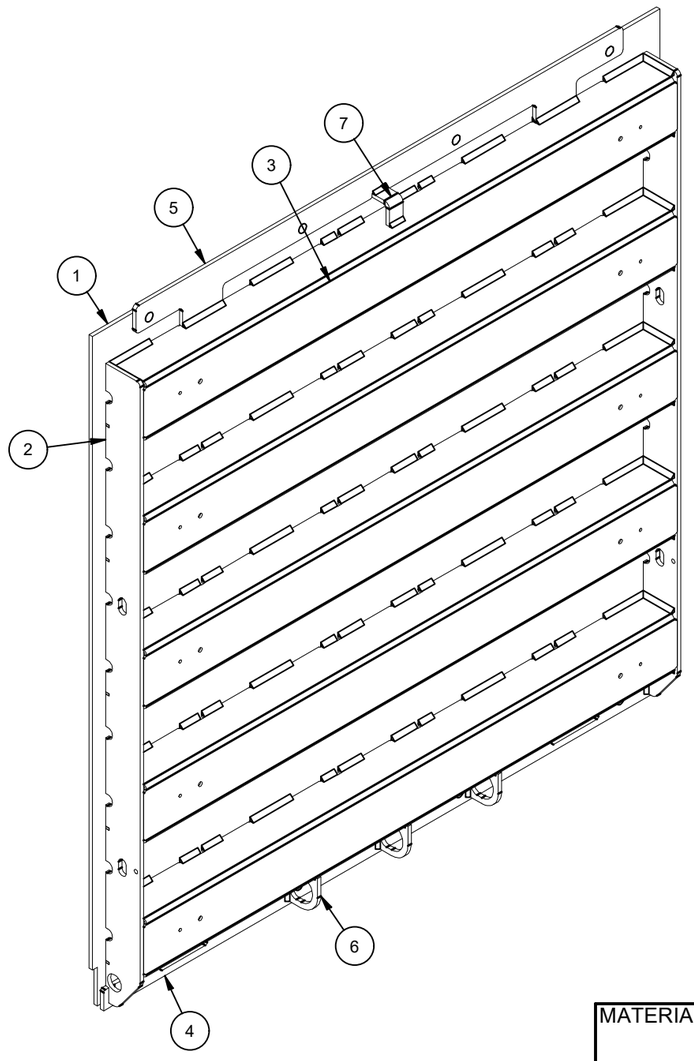

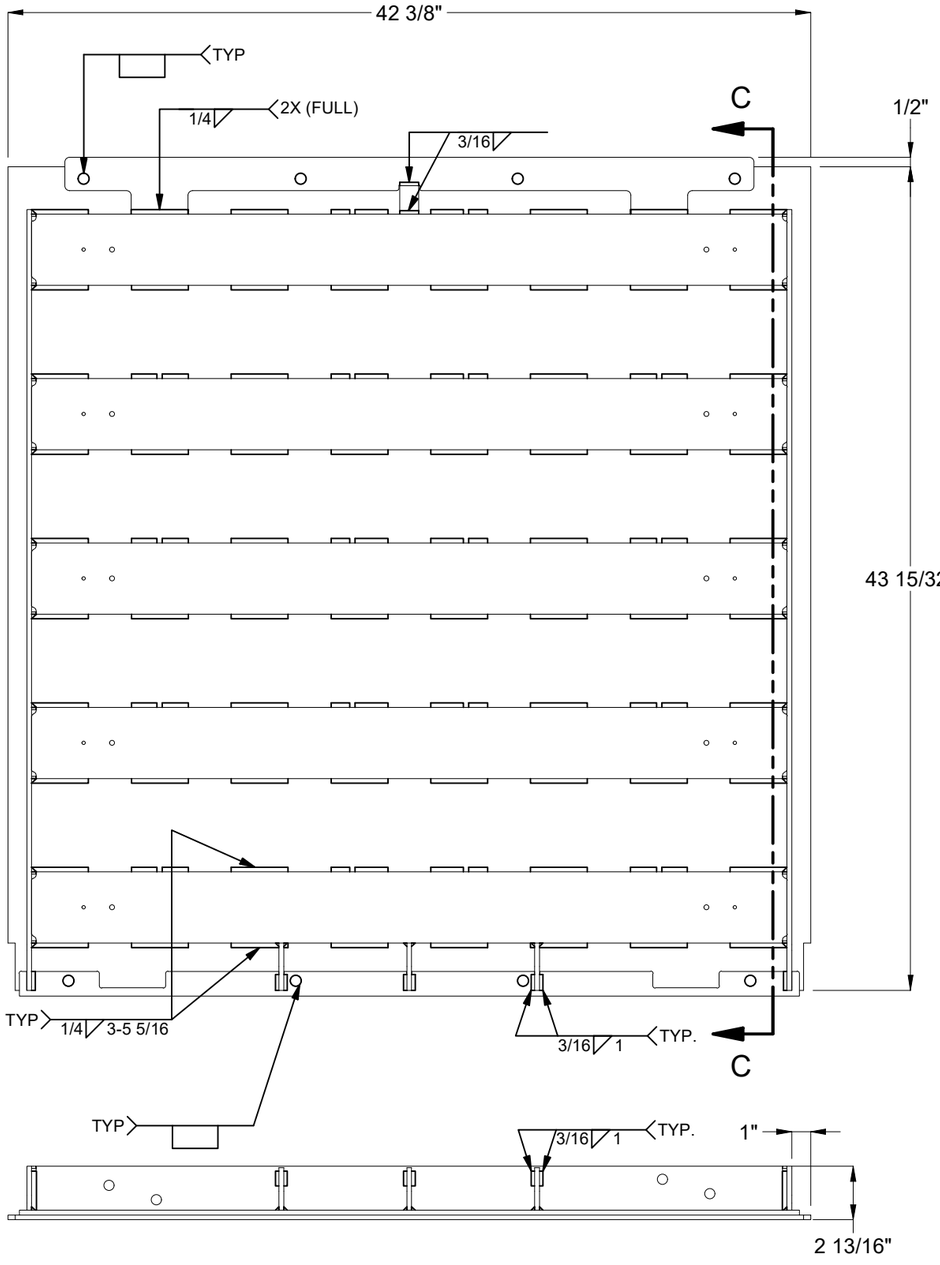

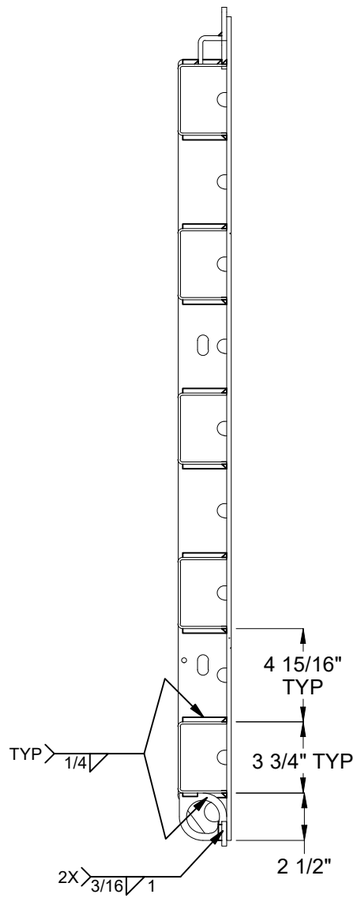

SECTION C-C

10001347 6.idw

MATERIAL FINISH: Raw	Infrastructure JENSEN 527 Dunn Circle, Sparks, NV 89431 775-352-2716 FAX: 755-358-8127 *JENSENMETALTECH.COM*	©2026 Jensen Infrastructure - All rights reserved. All materials appearing as Jensen Infrastructure documents and the like are proprietary work product and are protected under U.S. copyright and other laws. Unless in conjunction with business conducted with Jensen Infrastructure , any use of Jensen Infrastructure work product without express, written consent is prohibited, and recipient is prohibited from distributing any and all work product to non-approved third parties under penalty of civil action. This product shall only be produced in a Jensen Infrastructure facility.	PART NUMBER & DESCRIPTION: 200032671 DAS2-B-3785-H4-TRX-R-CL-LV-NVE-(RS-82)	REV: C-1-2
MATERIAL SURFACE: TraxPlate™			WEIGHT: 213.4 Lbs CREATED: 11/22/2019	DRAWN BY: M. Bouchard MODIFIED: 8/28/2026	SHEET: 7

NOT SYMMETRICAL

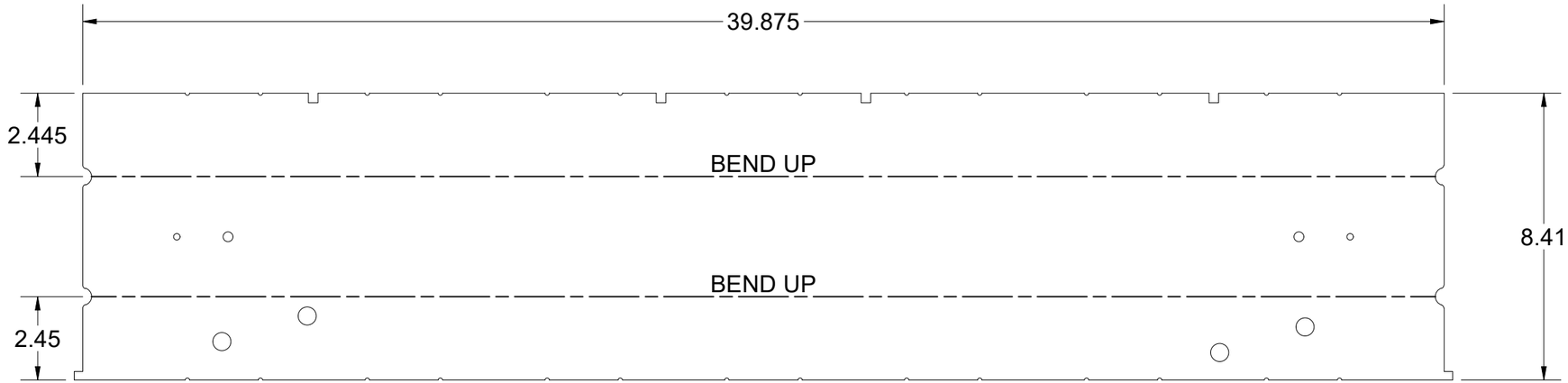

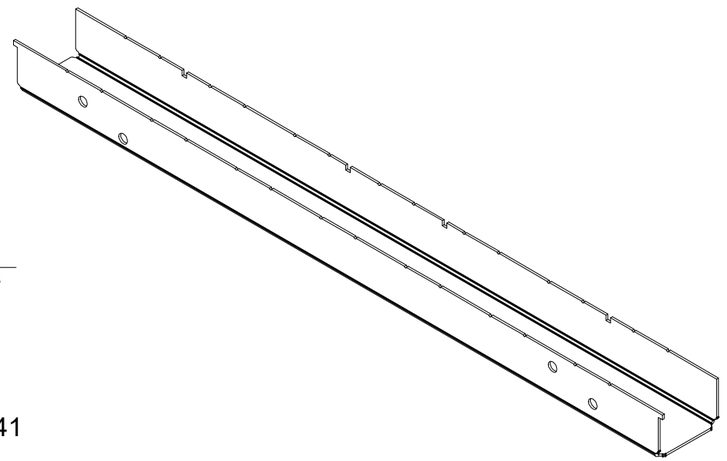

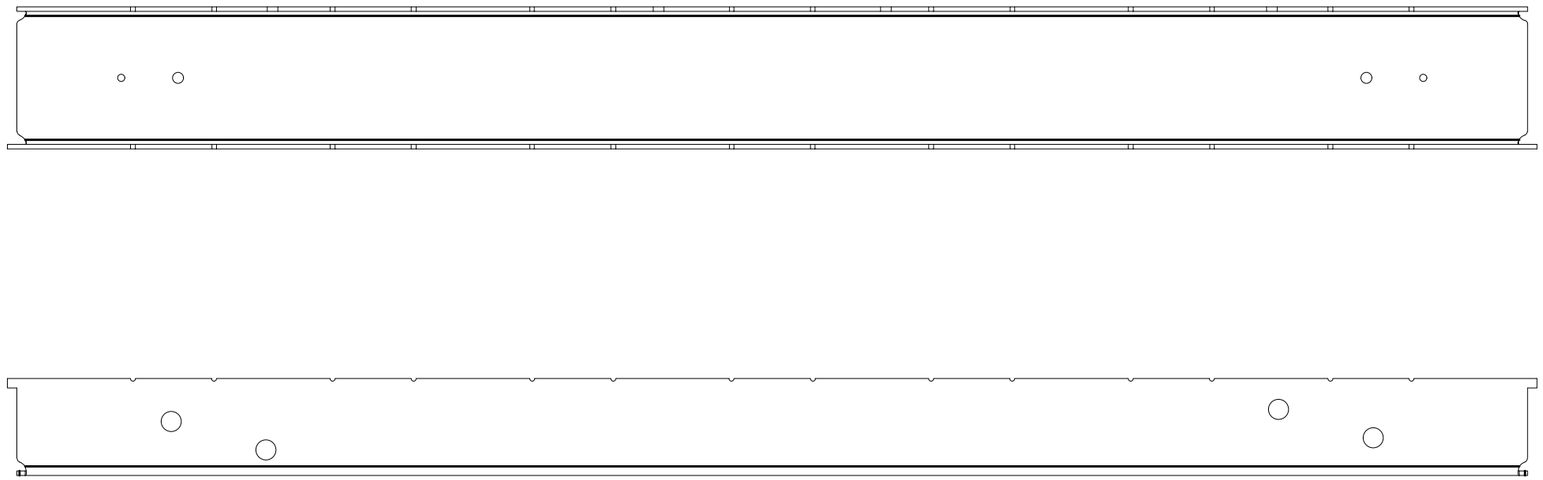

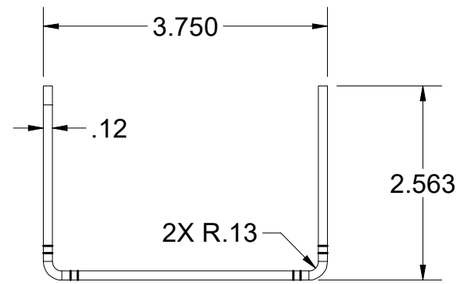

BEND TABLE			
BEND RADIUS	V-OPENING	BEND ANGLE	BEND DEDUCTION
0.125	1	90	0.235

MATERIAL IFS: 100007840

MATERIAL THK: 0.1196

MAT DESCRIPTION: SHT STL GR80 GA-11 SM-HR RAW .1196

Infrastructure JENSEN

527 Dunn Circle, Sparks, NV 89431
775-352-2716 FAX: 755-358-8127
JENSENMETALTECH.COM

©2026 Jensen Infrastructure - All rights reserved. All materials appearing as Jensen Infrastructure documents and the like are proprietary work product and are protected under U.S. copyright and other laws. Unless in conjunction with business conducted with Jensen Infrastructure , any use of Jensen Infrastructure work product without express, written consent is prohibited, and recipient is prohibited from distributing any and all work product to non-approved third parties under penalty of civil action. This product shall only be produced in a Jensen Infrastructure facility.

NAME & DESCRIPTION: 200032672 Door Component Steel Channel

REV: C-1-2

WEIGHT: 11.402 lbmass

DRAWN BY: M. Bouchard

CREATED: 11/22/2019

MODIFIED: 8/28/2026

SHEET: 8 OF 17

100013476.idw

SYMMETRICAL

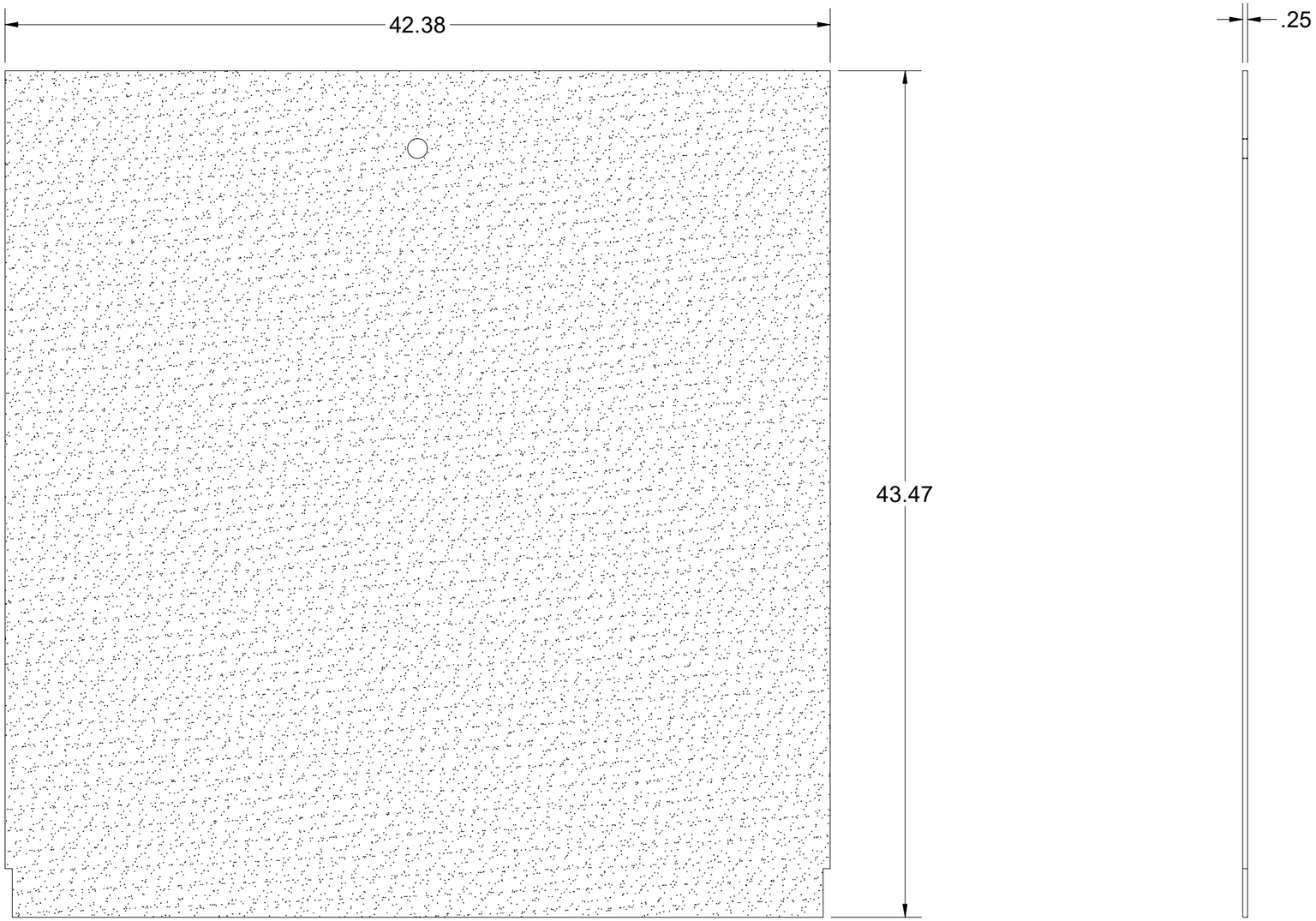

100013476.idw

BEND TABLE			
BEND RADIUS	V-OPENING	BEND ANGLE	BEND DEDUCTION
-	-	- 0	-

MATERIAL IFS: 100007735

MATERIAL THK: 0.25

MAT DESCRIPTION: STL ASTM A36 SM-HRPO RAW .250

Infrastructure JENSEN

527 Dunn Circle, Sparks, NV 89431
775-352-2716 FAX: 755-358-8127
JENSENMETALTECH.COM

©2026 Jensen Infrastructure - All rights reserved.
All materials appearing as Jensen Infrastructure documents and the like are proprietary work product and are protected under U.S. copyright and other laws. Unless in conjunction with business conducted with Jensen Infrastructure , any use of Jensen Infrastructure work product without express, written consent is prohibited, and recipient is prohibited from distributing any and all work product to non-approved third parties under penalty of civil action.
This product shall only be produced in a Jensen Infrastructure facility.

NAME & DESCRIPTION: 200032675
Door Component Steel Plate, Bottom

REV: C-1-2

WEIGHT: 130.592 lbmass

DRAWN BY: M. Bouchard

CREATED: 11/22/2019

MODIFIED: 8/28/2026

SHEET: 9 OF 17

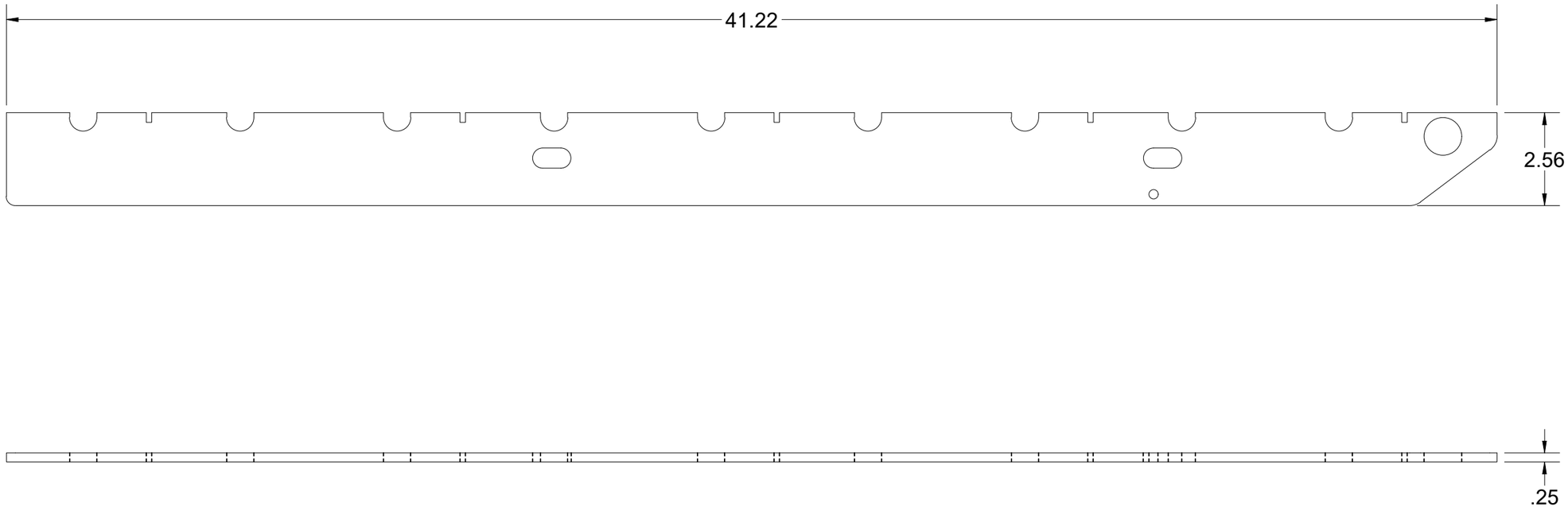

BEND TABLE				MATERIAL IFS: 100007735
BEND RADIUS	V-OPENING	BEND ANGLE	BEND DEDUCTION	MATERIAL THK: 0.25
-	-	- 0	-	MAT DESCRIPTION: STL ASTM A36 SM-HRPO RAW .250

Infrastructure JENSEN
527 Dunn Circle, Sparks, NV 89431
775-352-2716 FAX: 755-358-8127
JENSENMETALTECH.COM

©2026 Jensen Infrastructure - All rights reserved.
All materials appearing as Jensen Infrastructure documents and the like are proprietary work product and are protected under U.S. copyright and other laws. Unless in conjunction with business conducted with Jensen Infrastructure , any use of Jensen Infrastructure work product without express, written consent is prohibited, and recipient is prohibited from distributing any and all work product to non-approved third parties under penalty of civil action.
This product shall only be produced in a Jensen Infrastructure facility.

NAME & DESCRIPTION: 200032676 Door Component Steel Side Bar		REV: C-1-2
WEIGHT: 7.008 lbmass	DRAWN BY: M. Bouchard	SHEET: 10 OF 17
CREATED: 11/22/2019	MODIFIED: 8/28/2026	

100013476.idw

SYMMETRICAL

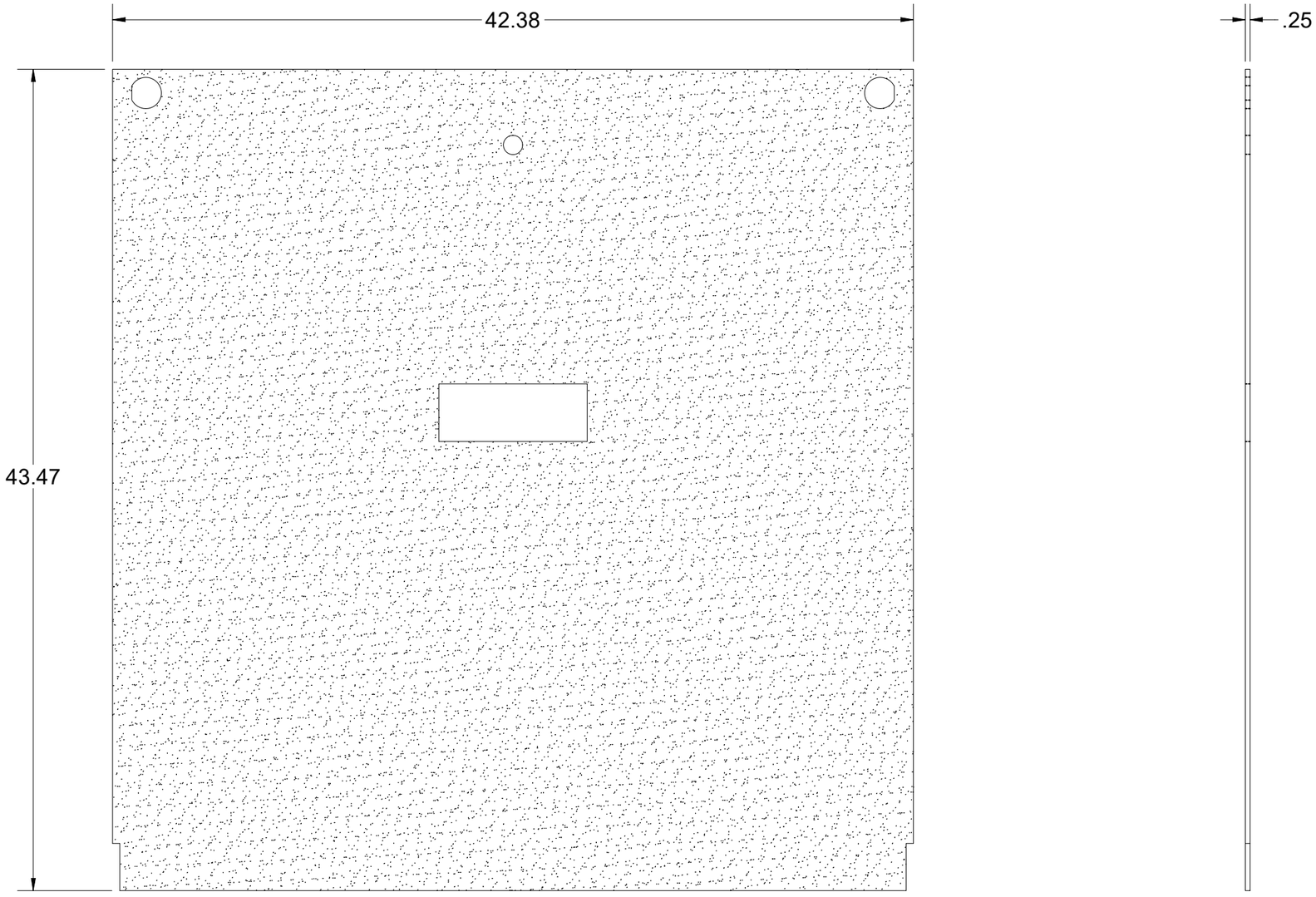

100013476.idw

BEND TABLE			
BEND RADIUS	V-OPENING	BEND ANGLE	BEND DEDUCTION
-	-	- 0	-

MATERIAL IFS: 100007735

MATERIAL THK: 0.25

MAT DESCRIPTION: STL ASTM A36 SM-HRPO RAW .250

Infrastructure JENSEN

527 Dunn Circle, Sparks, NV 89431
775-352-2716 FAX: 755-358-8127
JENSENMETALTECH.COM

©2026 Jensen Infrastructure - All rights reserved. All materials appearing as Jensen Infrastructure documents and the like are proprietary work product and are protected under U.S. copyright and other laws. Unless in conjunction with business conducted with Jensen Infrastructure , any use of Jensen Infrastructure work product without express, written consent is prohibited, and recipient is prohibited from distributing any and all work product to non-approved third parties under penalty of civil action. This product shall only be produced in a Jensen Infrastructure facility.

NAME & DESCRIPTION: 200032678
Door Component Steel Plate, Top Nameplate

REV: C-1-2

WEIGHT: 128.588 lbmass

DRAWN BY: M. Bouchard

CREATED: 11/22/2019

MODIFIED: 8/28/2026

SHEET: 11 OF 17

SYMMETRICAL

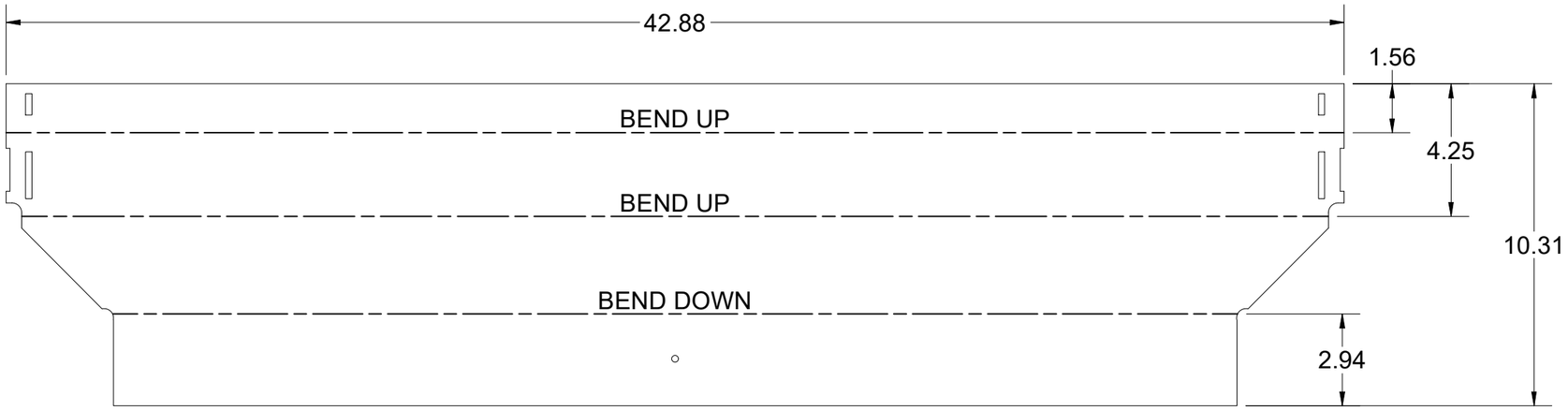

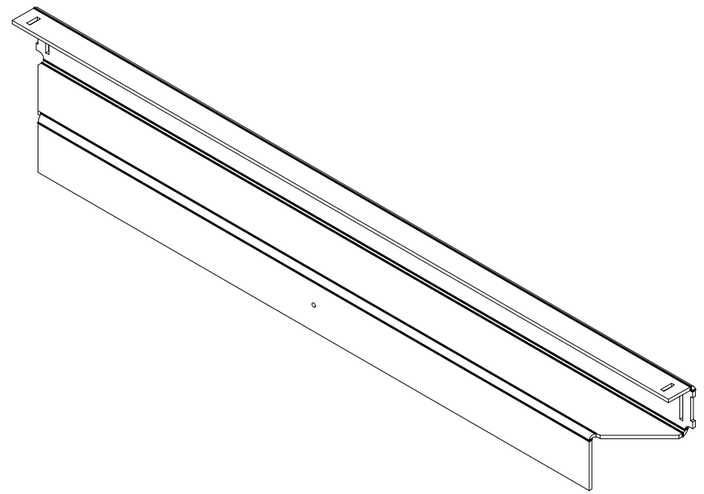

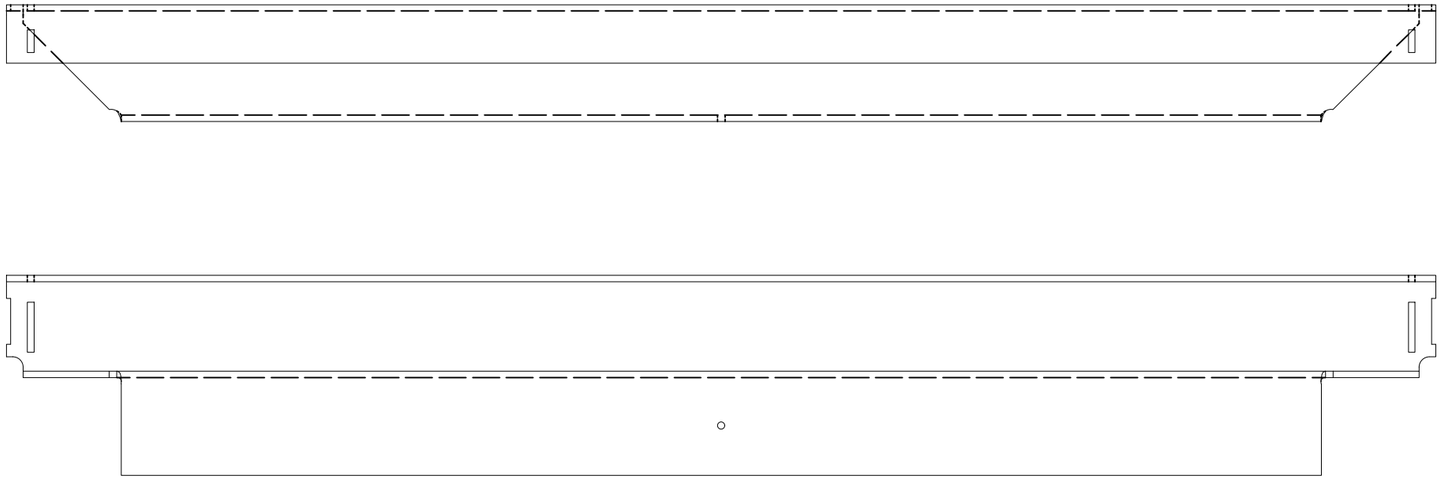

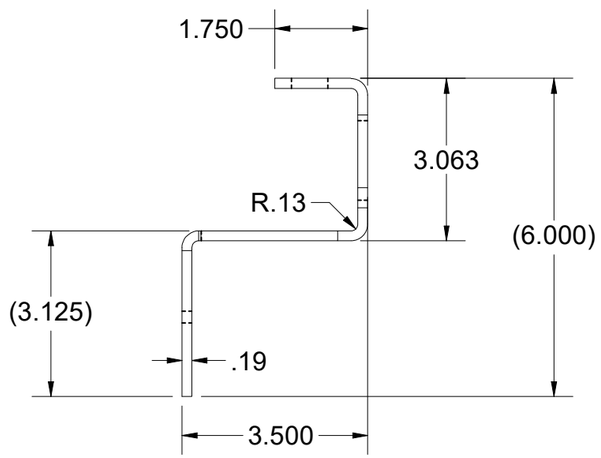

BEND TABLE			
BEND RADIUS	V-OPENING	BEND ANGLE	BEND DEDUCTION
0.125	2	90	0.375

MATERIAL IFS: 100007734

MATERIAL THK: 0.1875

MAT DESCRIPTION: STL ASTM A36 SM-HRPO 60X120 RAW .1875

Infrastructure JENSEN

527 Dunn Circle, Sparks, NV 89431
775-352-2716 FAX: 755-358-8127
JENSENMETALTECH.COM

©2026 Jensen Infrastructure - All rights reserved.
All materials appearing as Jensen Infrastructure documents and the like are proprietary work product and are protected under U.S. copyright and other laws. Unless in conjunction with business conducted with Jensen Infrastructure , any use of Jensen Infrastructure work product without express, written consent is prohibited, and recipient is prohibited from distributing any and all work product to non-approved third parties under penalty of civil action.
This product shall only be produced in a Jensen Infrastructure facility.

NAME & DESCRIPTION: 200032680 Frame Component Steel Frame End, Adjustable

REV: C-1-2

WEIGHT: 22.379 lbmass

DRAWN BY: M. Bouchard

CREATED: 11/22/2019

MODIFIED: 8/28/2026

SHEET: 12 OF 17

100013476.idw

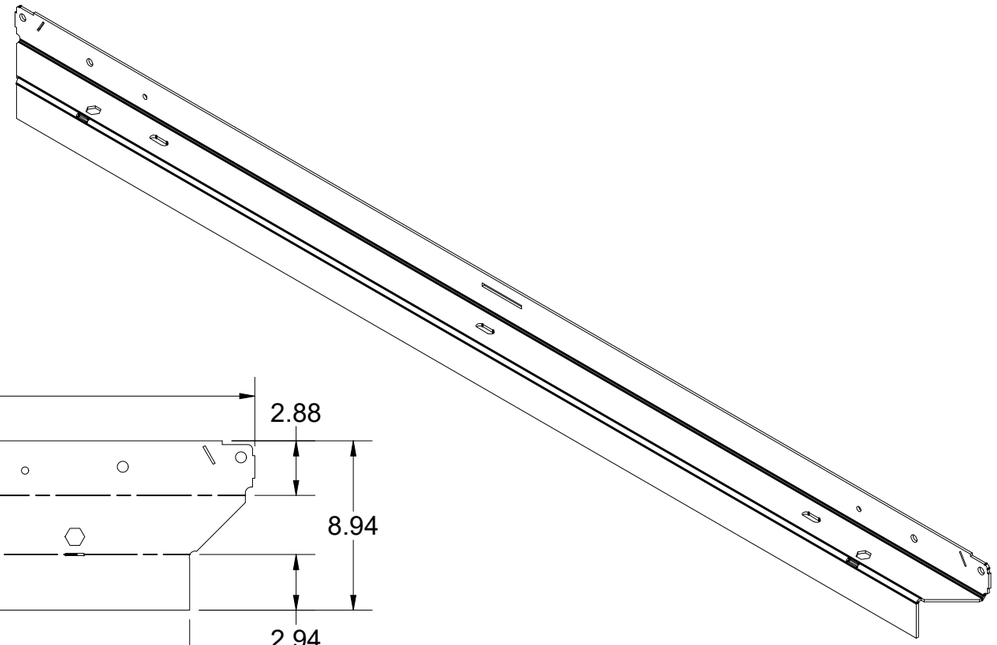

SYMMETRICAL

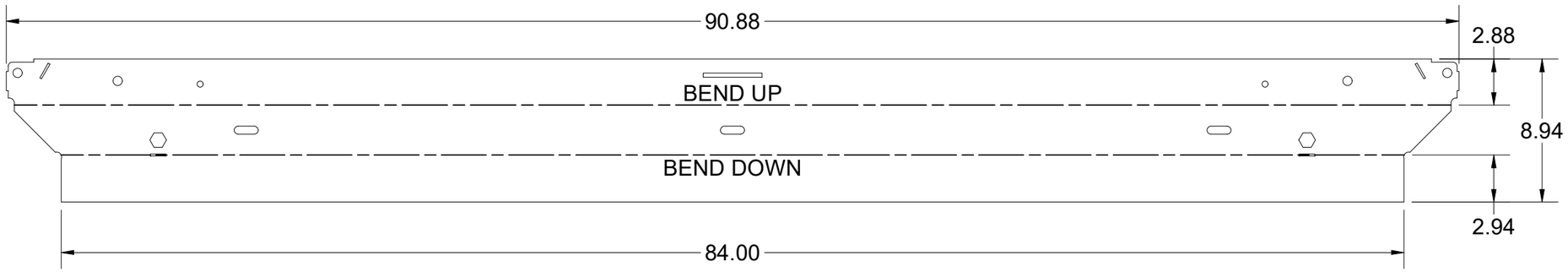

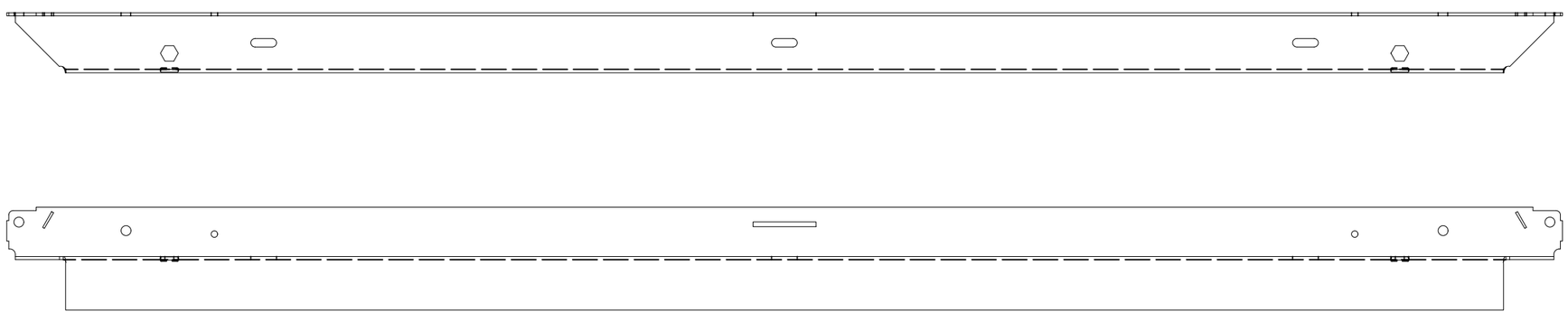

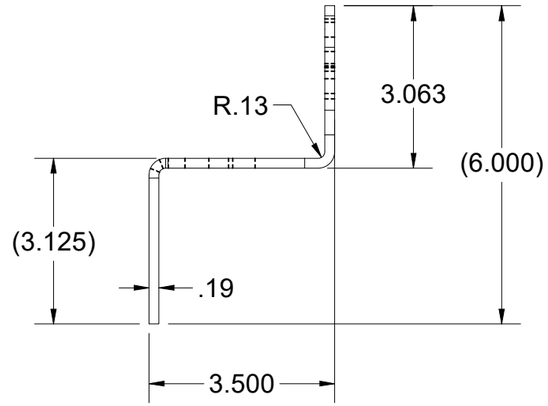

BEND TABLE				MATERIAL IFS: 100007734
BEND RADIUS	V-OPENING	BEND ANGLE	BEND DEDUCTION	MATERIAL THK: 0.1875
0.125	2	90	0.375	MAT DESCRIPTION: STL ASTM A36 SM-HRPO 60X120 RAW .1875

Infrastructure JENSEN

527 Dunn Circle, Sparks, NV 89431
775-352-2716 FAX: 755-358-8127
JENSENMETALTECH.COM

©2026 Jensen Infrastructure - All rights reserved. All materials appearing as Jensen Infrastructure documents and the like are proprietary work product and are protected under U.S. copyright and other laws. Unless in conjunction with business conducted with Jensen Infrastructure , any use of Jensen Infrastructure work product without express, written consent is prohibited, and recipient is prohibited from distributing any and all work product to non-approved third parties under penalty of civil action. This product shall only be produced in a Jensen Infrastructure facility.

NAME & DESCRIPTION: 200032681 — Frame Component Steel Frame Side, Adjustable		REV: C-1-2
WEIGHT: 42.001 lbmass	DRAWN BY: M. Bouchard	SHEET: 13 OF 17
CREATED: 11/22/2019	MODIFIED: 8/28/2026	

100013476.idw

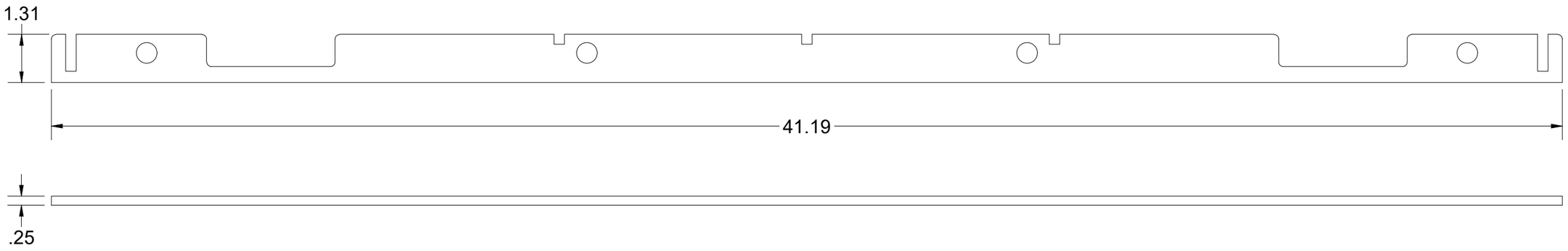

BEND TABLE			
BEND RADIUS	V-OPENING	BEND ANGLE	BEND DEDUCTION
-	-	- 0	-

MATERIAL IFS: 100007735

MATERIAL THK: 0.25

MAT DESCRIPTION: STL ASTM A36 SM-HRPO RAW .250

Infrastructure
JENSEN
527 Dunn Circle, Sparks, NV 89431
775-352-2716 FAX: 755-358-8127
JENSENMETALTECH.COM

©2026 Jensen Infrastructure - All rights reserved.
All materials appearing as Jensen Infrastructure documents and the like are proprietary work product and are protected under U.S. copyright and other laws. Unless in conjunction with business conducted with Jensen Infrastructure , any use of Jensen Infrastructure work product without express, written consent is prohibited, and recipient is prohibited from distributing any and all work product to non-approved third parties under penalty of civil action.
This product shall only be produced in a Jensen Infrastructure facility.

NAME & DESCRIPTION: 200032693
3785 GAP FILLER

REV: C-1-2

WEIGHT: 3.276 lbmass

DRAWN BY: M. Bouchard

CREATED: 11/22/2019

MODIFIED: 8/28/2026

SHEET: 14 OF 17

100013476.idw

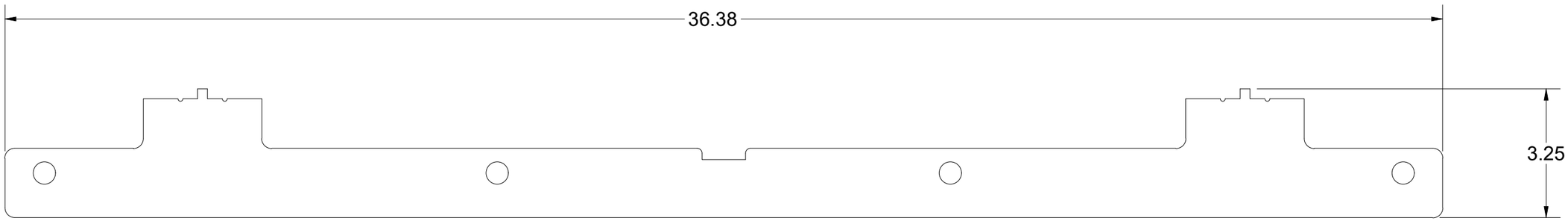

BEND TABLE				MATERIAL IFS: 100007735
BEND RADIUS	V-OPENING	BEND ANGLE	BEND DEDUCTION	MATERIAL THK: 0.25
-	-	-	-	MAT DESCRIPTION: STL ASTM A36 SM-HRPO RAW .250

Infrastructure
JENSEN
527 Dunn Circle, Sparks, NV 89431
775-352-2716 FAX: 755-358-8127
JENSENMETALTECH.COM

©2026 Jensen Infrastructure - All rights reserved.
All materials appearing as Jensen Infrastructure documents and the like are proprietary work product and are protected under U.S. copyright and other laws. Unless in conjunction with business conducted with Jensen Infrastructure , any use of Jensen Infrastructure work product without express, written consent is prohibited, and recipient is prohibited from distributing any and all work product to non-approved third parties under penalty of civil action.
This product shall only be produced in a Jensen Infrastructure facility.

NAME & DESCRIPTION: 200087247 Door Component Steel Lap Bar 37in, 2.5" Stiffener Offset		REV: C-1-2
WEIGHT: 4.966 lbmass	DRAWN BY: M. Bouchard	SHEET: 15 OF 17
CREATED: 11/22/2019	MODIFIED: 8/28/2026	

100013476.idw

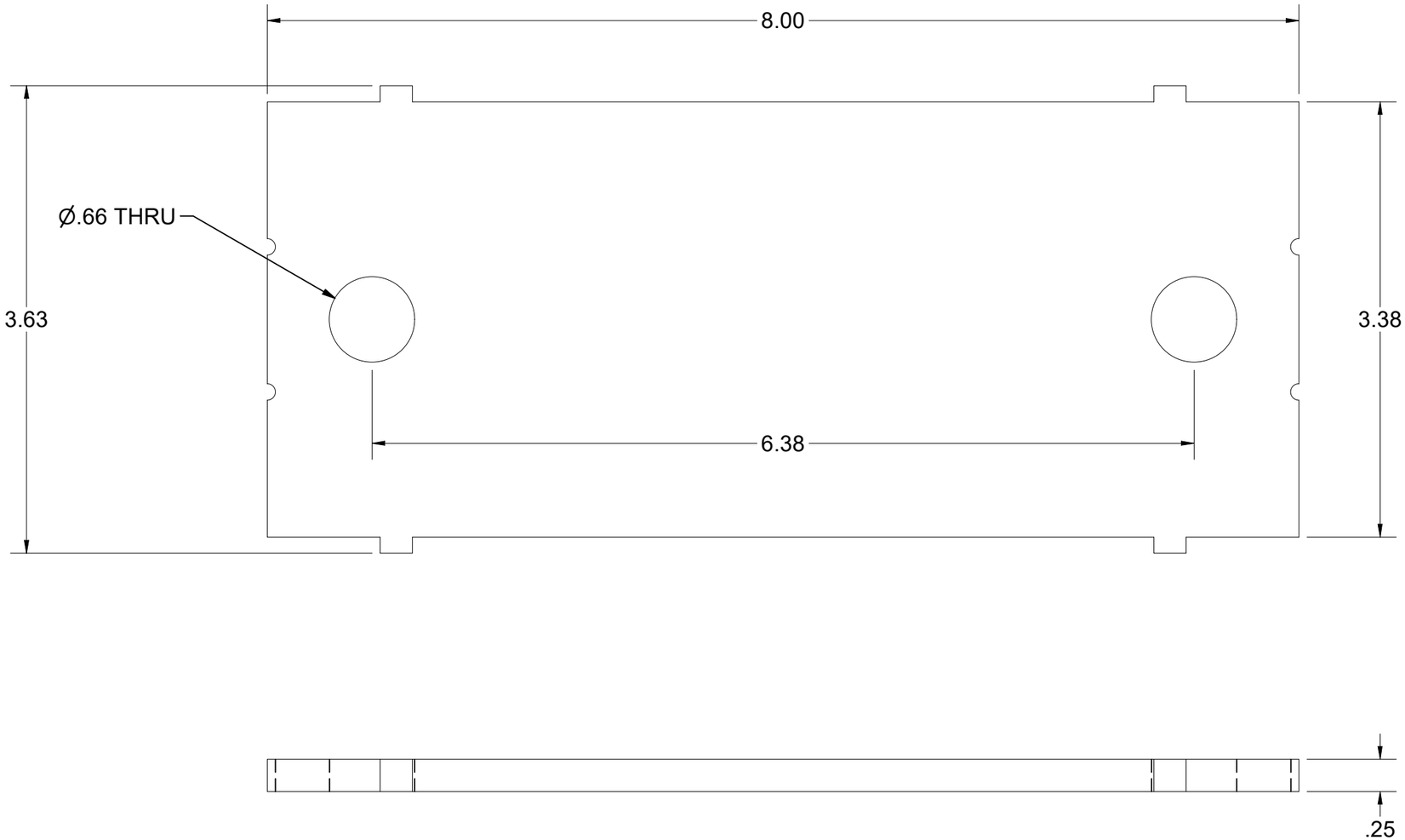

BEND TABLE			
BEND RADIUS	V-OPENING	BEND ANGLE	BEND DEDUCTION
-	-	- 0	-

MATERIAL IFS: 100007735

MATERIAL THK: 0.25

MAT DESCRIPTION: STL ASTM A36 SM-HRPO RAW .250

Infrastructure JENSEN
527 Dunn Circle, Sparks, NV 89431
775-352-2716 FAX: 755-358-8127
JENSENMETALTECH.COM

©2026 Jensen Infrastructure - All rights reserved.
All materials appearing as Jensen Infrastructure documents and the like are proprietary work product and are protected under U.S. copyright and other laws. Unless in conjunction with business conducted with Jensen Infrastructure , any use of Jensen Infrastructure work product without express, written consent is prohibited, and recipient is prohibited from distributing any and all work product to non-approved third parties under penalty of civil action.
This product shall only be produced in a Jensen Infrastructure facility.

NAME & DESCRIPTION: 200091824 NAME PLATE BACKING PLATE

REV: C-1-2

WEIGHT: 1.876 lbmass

DRAWN BY: M. Bouchard

CREATED: 11/22/2019

MODIFIED: 8/28/2026

SHEET: 16 OF 17

100013476.idw

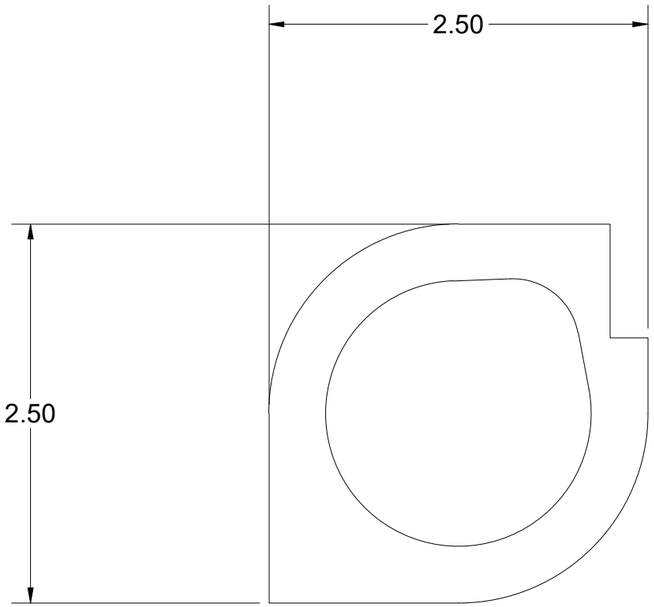

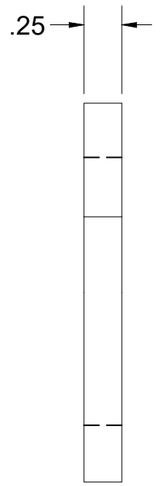

BEND TABLE				MATERIAL IFS: 100007735
BEND RADIUS	V-OPENING	BEND ANGLE	BEND DEDUCTION	MATERIAL THK: 0.25
-	-	- 0	-	MAT DESCRIPTION: STL ASTM A36 SM-HRPO RAW .250

Infrastructure
JENSEN
527 Dunn Circle, Sparks, NV 89431
775-352-2716 FAX: 755-358-8127
JENSENMETALTECH.COM

©2026 Jensen Infrastructure - All rights reserved.
All materials appearing as Jensen Infrastructure documents and the like are proprietary work product and are protected under U.S. copyright and other laws. Unless in conjunction with business conducted with Jensen Infrastructure , any use of Jensen Infrastructure work product without express, written consent is prohibited, and recipient is prohibited from distributing any and all work product to non-approved third parties under penalty of civil action.
This product shall only be produced in a Jensen Infrastructure facility.

NAME & DESCRIPTION: 200122232 Rear Lap Bar Gusset		REV: C-1-2
WEIGHT: 0.206 lbmass	DRAWN BY: M. Bouchard	SHEET: 17 OF 17
CREATED: 11/22/2019	MODIFIED: 8/28/2026	

100013476.idw