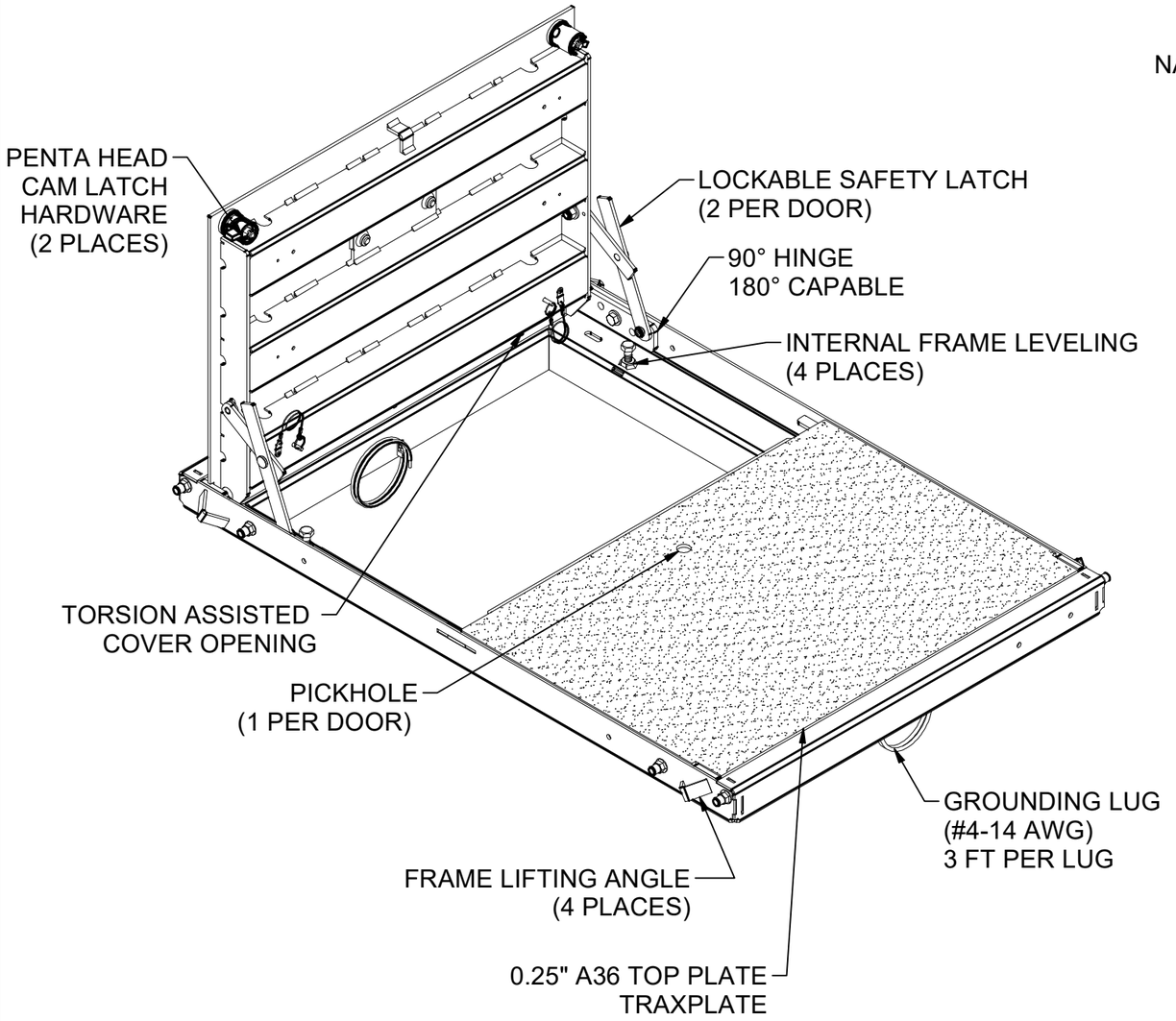

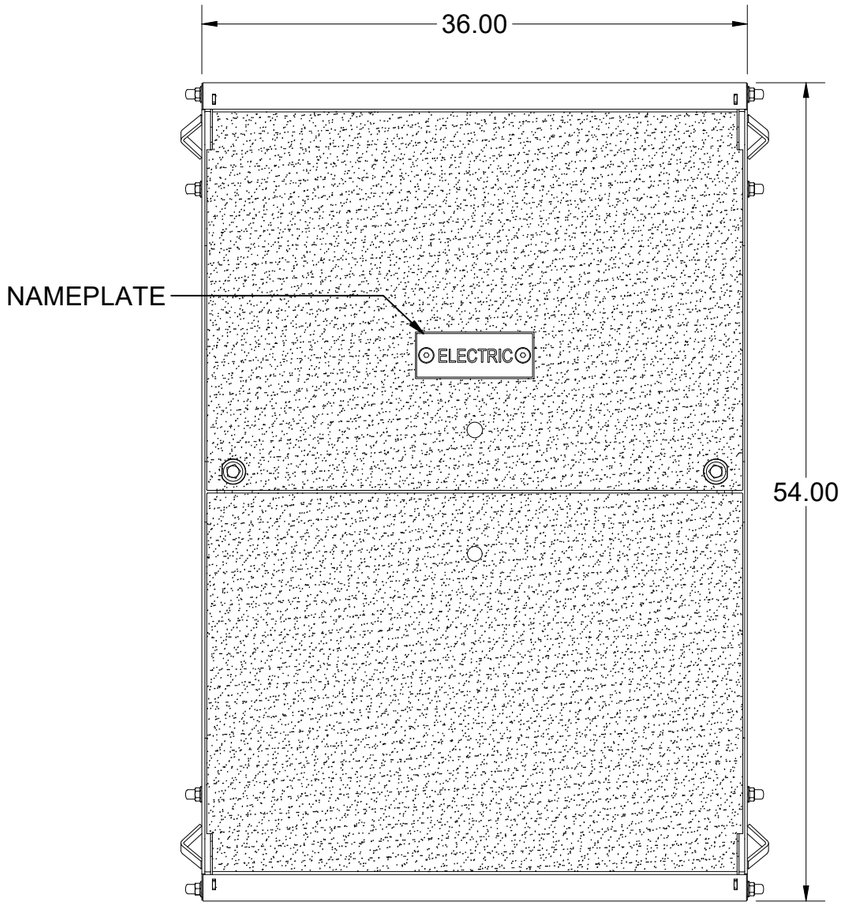

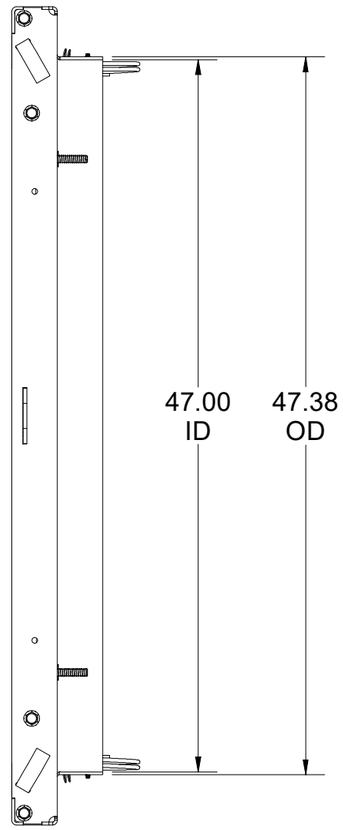

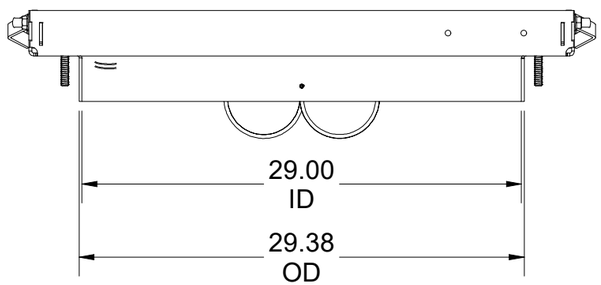

DESIGNED FOR ROBOT WELDING

LOADING CRITERIA: ASTM C1802 Load Level 04

16,000 lb load on 10" x 20" footprint, without impact restricted to parking spaces and areas within close proximity of roadways.

SURFACE:	TraxPlate™	FINISH:	Galvanized
WEIGHT:	324.92 lbs	MARKING:	None

Infrastructure
JENSEN
527 Dunn Circle, Sparks, NV 89431
775-352-2716 FAX: 755-358-8127
JENSENMETALTECH.COM

©2026 Jensen Infrastructure - All rights reserved.
All materials appearing as Jensen Infrastructure documents and the like are proprietary work product and are protected under U.S. copyright and other laws. Unless in conjunction with business conducted with Jensen Infrastructure , any use of Jensen Infrastructure work product without express, written consent is prohibited, and recipient is prohibited from distributing any and all work product to non-approved third parties under penalty of civil action.
This product shall only be produced in a Jensen Infrastructure facility.

DESCRIPTION:	CAS2-3048-AH4-TRX-G-CL-LV-NVE-OH06-(RS-80)		
	30x48 Standard Cover Assembly (ASTM C1802 Load Level 04, Steel, Hinged, Pickhole, TraxPlate™, Galvanized, NV Energy (RS-80)) 06		
PART NUMBER:	100013475	DRAWN BY:	R. Dohr
CREATED:	11/21/2019	MODIFIED:	8/28/2026

REV: C-1-4

SHEET: 1

100013475.idw

BILL OF MATERIALS

ITEM	ITEM QTY	QTY	PART NUMBER	DESCRIPTION	PART NAME
1	1	1	200032592	FAS-3048-AH-R-LV-NVE-OH06-(RS-80)	200032592
2	1	1	200032590	DAS2-B-3048-H4-TRX-R-CL-LV-NVE-(RS-80)	200032590
3	1	1	200032591	DAS2-T-3048-H4-TRX-R-CL-LV-NVE-(RS-80)	200032591
4	4	4	100007869	BOLT SHCS 1/2-13 X 1-3/4 SS	100007869
5	4	4	100003823	Hex Bolt 1/2-13 UNC ZINC - PT - 1.5"	100003823
6	2	2	100007729	HEX NUT SLOTTED CASTLE HEAD 1/2-13 SS	100007729
7	2	2	100007857	NUT FINGER 1/2-13 BRASS	100007857
8	2	2	100007915	SPRING COMPRESSION 055 X 5/8 X 7/8 LONG	100007915
9	2	2	100007918	COTTER PIN 0.094DIA X 1-1/4	100007918
10	8	8	100007939	CAP VINYL .467 X 1/2	100007939
11	4	4	100007933	SAFETY LATCH ASSY FOR UNI AND 90 D HINGE	100007933
12	4	4	100007492	HEX NUT NYLOCK - 1/2-13 UNC - GR5 - ZINC	100007492
13	4	4	100007924	LANYARD 3/64 W/PIN COATED SS	100007924
14	4	4	100007882	Rivet Blind Grip .1875" Large Domed Head Range-0.376-0.5" Steel	100007882
15	2	2	100007666	Hinge Assembly, Right, Steel	100007666
16	2	2	100007657	Hinge Assembly, Left, 7/16, Steel	100007657
17	2	2	100007733	Bolt Socket Flat Countersunk Head - 1/2-13 UNC - Grade 5 - Zinc - FT - 1"	100007733
18	12	12	100011418	WASHER FLAT 1/2 NARROW ZINC	100011418
19	2	6.000 in	100007936	WIRE THN STRANDED COPPER GRN COAT #6	100007936
20	2	2	100007917	CHAIR LUG 1/4-20 ALUM	100007917
21	2	2	100007670	SPRING MOUNT ASSY .438	100007670
22	4	4	100007873	BOLT SOCKET CAP - 3/8-16 UNC - 1.25 - ZINC	100007873
23	4	4	100007859	RIVET NUT 3/8-16 FLAT KNURLED	100007859
24	4	4	100007755	HEX COIL BOLT 1/2 x 3-1/2 SS	100007755
25	8	8	100026256	LOW-STRENGTH STEEL FLANGE NUT, 1/2" - 13 THREAD SIZE	100026256
26	4	4	100007876	Bolt Shoulder Socket Head - 3/8-16 UNC - SD-0.5" - SL-0.3125" - Grade 5 - Zinc	100007876
27	2	2	100042340	Zinc-Plated Steel Thread-Cutting Screws for Metal, External Hex Drive, 1/4-20 Thread Size, 1/2" Long	100042340
28	2	2	100007726	TORSION HEX ROD .4375 x 30in RAW	100007726
29	2	2	100007749	BOLT PENTA 1/2-13 UNC 0.875 HEAD 2.25L SS DRILLED	100007749
30	1	1	100007101	NAME PLATE STEEL - ELECTRIC	100007101

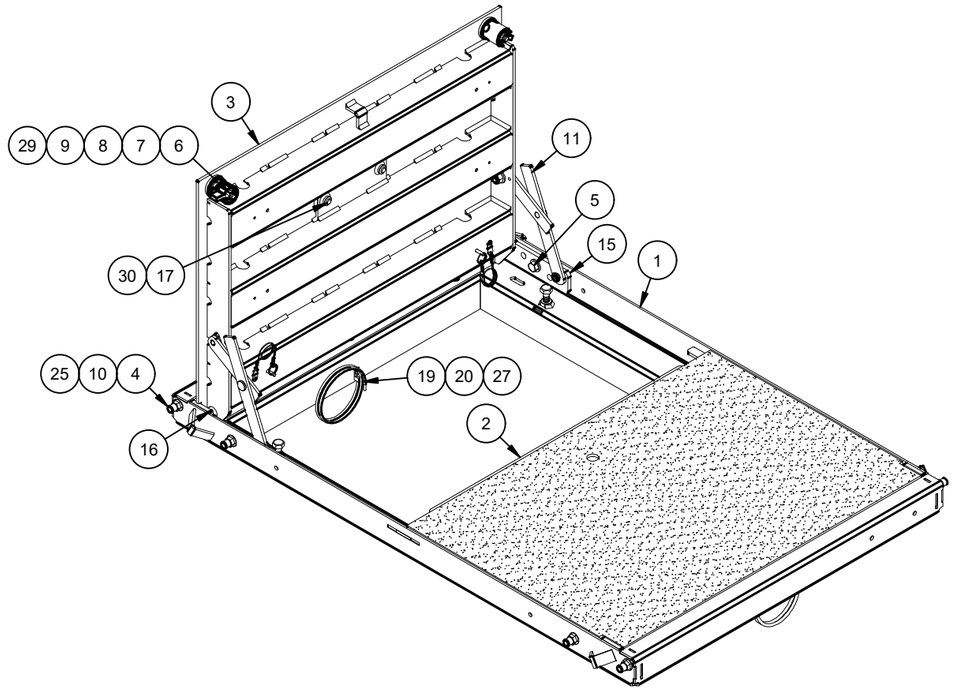

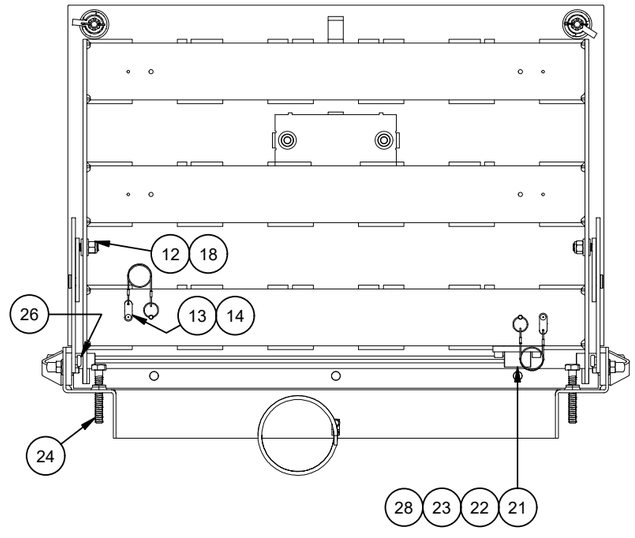

100013475.idw

REVISION HISTORY	
DESCRIPTION	DATE
REVISED REAR LAP BAR TO ADDRESS WARPING ISSUES. MADE NAMEPLATE SLOT LARGER TO ACCOMMODATE GALV	R. DOHR
REVERTED TO 7/16" HEX ROD PER SHOP REQUEST	6/10/2026
REVISED TO PENTA HEAD HARDWARE AND 'ELECTRIC' NAMEPLATE	8/28/2026

MATERIAL FINISH: Galvanized

MATERIAL SURFACE: TraxPlate™

Infrastructure JENSEN

527 Dunn Circle, Sparks, NV 89431
775-352-2716 FAX: 755-358-8127
JENSENMETALTECH.COM

©2026 Jensen Infrastructure - All rights reserved.
All materials appearing as Jensen Infrastructure documents and the like are proprietary work product and are protected under U.S. copyright and other laws. Unless in conjunction with business conducted with Jensen Infrastructure , any use of Jensen Infrastructure work product without express, written consent is prohibited, and recipient is prohibited from distributing any and all work product to non-approved third parties under penalty of civil action.
This product shall only be produced in a Jensen Infrastructure facility.

PART NUMBER & DESCRIPTION: 100013475
CAS2-3048-AH4-TRX-G-CL-LV-NVE-OH06-(RS-80)

REV: C-1-4

WEIGHT: 324.92 Lbs

DRAWN BY: R. Dohr

CREATED: 11/21/2019

MODIFIED: 8/28/2026

SHEET: 2

BURN LIST - BOM

PART NAME	ITEM QTY	QTY	DESCRIPTION	STOCK NUMBER	MATERIAL	MASS	SHEET
200032593	4	15.081 lbmass	Door Component Steel Side Bar	100007735	STL ASTM A36 SM-HRPO RAW .250	3.770 lbmass	08
200032594	1	62.523 lbmass	Door Component Steel Plate, Bottom	100007735	STL ASTM A36 SM-HRPO RAW .250	62.523 lbmass	09
200032596	6	56.095 lbmass	Door Component Steel Channel	100007840	SHT STL GR80 GA-11 SM-HR RAW .1196	9.349 lbmass	10
200032597	1	60.519 lbmass	Door Component Steel Plate, Top Nameplate	100007735	STL ASTM A36 SM-HRPO RAW .250	60.519 lbmass	11
200032598	2	36.818 lbmass	Frame Component Steel Frame End, Adjustable	100007734	STL ASTM A36 SM-HRPO 60X120 RAW .1875	18.409 lbmass	12
200032599	2	48.064 lbmass	Frame Component Steel Frame Side, Adjustable	100007734	STL ASTM A36 SM-HRPO 60X120 RAW .1875	24.032 lbmass	13
200035660	2	6.267 lbmass	3048 LID GAP FILLER	100007735	STL ASTM A36 SM-HRPO RAW .250	3.134 lbmass	14
200087242	1	4.096 lbmass	Door Component Steel Lap Bar 30in, 2.5" Stiffener Offset	100007735	STL ASTM A36 SM-HRPO RAW .250	4.096 lbmass	15
200091824	1	1.876 lbmass	NAME PLATE BACKING PLATE	100007735	STL ASTM A36 SM-HRPO RAW .250	1.876 lbmass	16

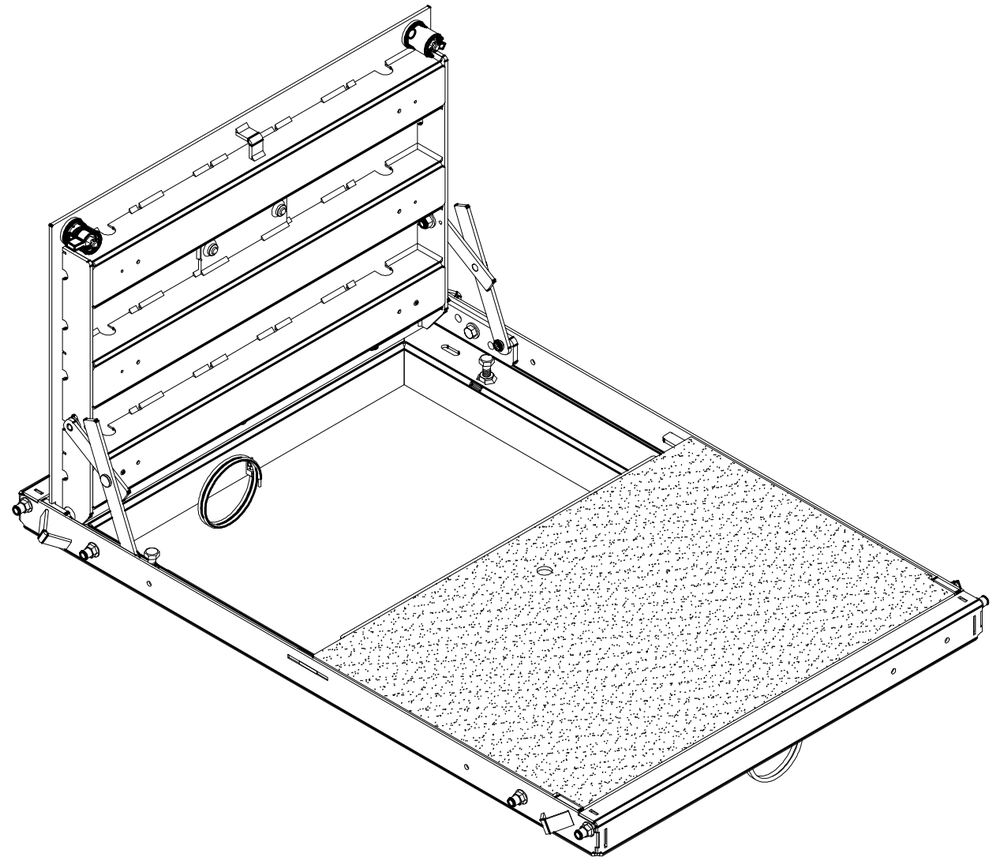

100013475.idw

MATERIAL FINISH: Galvanized

MATERIAL SURFACE: TraxPlate™

Infrastructure
JENSEN
527 Dunn Circle, Sparks, NV 89431
775-352-2716 FAX: 755-358-8127
JENSENMETALTECH.COM

©2026 Jensen Infrastructure - All rights reserved.
All materials appearing as Jensen Infrastructure documents and the like are proprietary work product and are protected under U.S. copyright and other laws. Unless in conjunction with business conducted with Jensen Infrastructure , any use of Jensen Infrastructure work product without express, written consent is prohibited, and recipient is prohibited from distributing any and all work product to non-approved third parties under penalty of civil action.
This product shall only be produced in a Jensen Infrastructure facility.

PART NUMBER & DESCRIPTION: 100013475
CAS2-3048-AH4-TRX-G-CL-LV-NVE-OH06-(RS-80)

REV: C-1-4

WEIGHT: 324.92 Lbs

DRAWN BY: R. Dohr

CREATED: 11/21/2019

MODIFIED: 8/28/2026

SHEET: 3

CUT LIST - BOM

PART NAME	ITEM QTY	BASE QTY	QTY	DESCRIPTION	PART NUMBER	MASS	SHEET
100007936	2	36 in	6.000 in	WIRE THN STRANDED COPPER GRN COAT #6	100007936	0.507 lbmass	
100007726	2	1	2	TORSION HEX ROD .4375 x 30in RAW	100007726	1.410 lbmass	

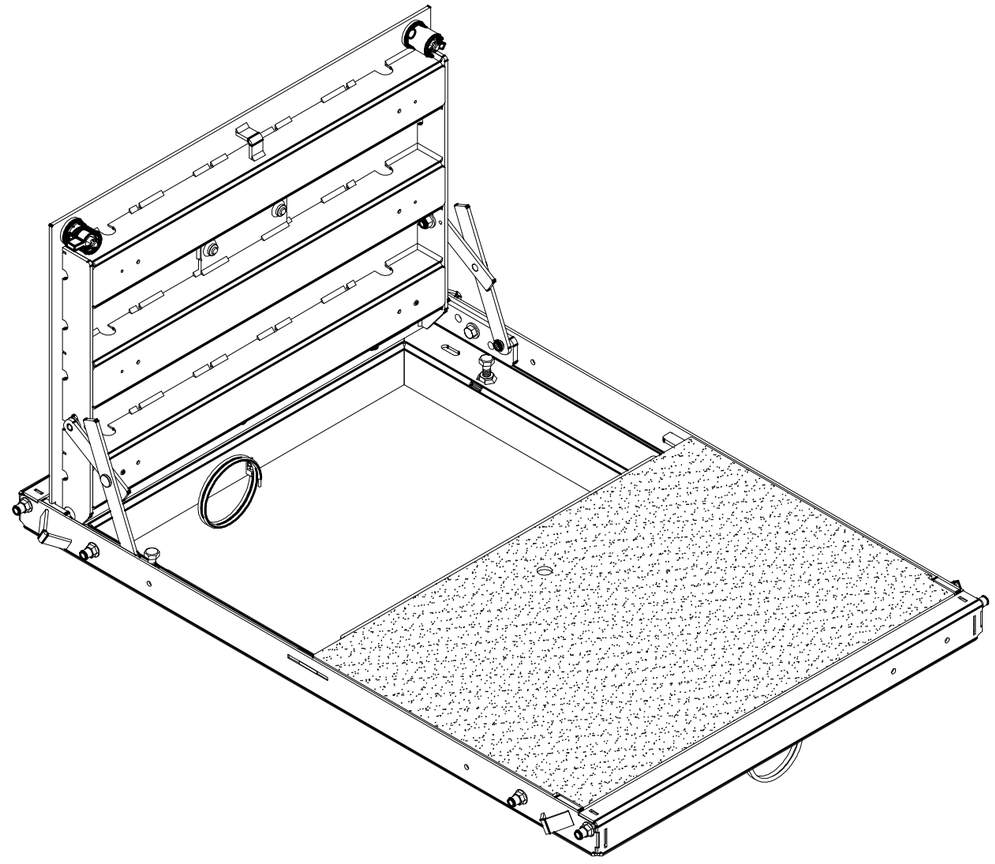

100013475.idw

MATERIAL FINISH: Galvanized

MATERIAL SURFACE: TraxPlate™

Infrastructure
JENSEN
527 Dunn Circle, Sparks, NV 89431
775-352-2716 FAX: 755-358-8127
JENSENMETALTECH.COM

©2026 Jensen Infrastructure - All rights reserved.
All materials appearing as Jensen Infrastructure documents and the like are proprietary work product and are protected under U.S. copyright and other laws. Unless in conjunction with business conducted with Jensen Infrastructure , any use of Jensen Infrastructure work product without express, written consent is prohibited, and recipient is prohibited from distributing any and all work product to non-approved third parties under penalty of civil action.
This product shall only be produced in a Jensen Infrastructure facility.

PART NUMBER & DESCRIPTION: 100013475
CAS2-3048-AH4-TRX-G-CL-LV-NVE-OH06-(RS-80)

REV: C-1-4

WEIGHT: 324.92 Lbs

DRAWN BY: R. Dohr

CREATED: 11/21/2019

MODIFIED: 8/28/2026

SHEET: 4

BILL OF MATERIALS

ITEM	ITEM QTY	QTY	PART NUMBER	DESCRIPTION	PART NAME
1	1	62.523 lbmass	100007735	Door Component Steel Plate, Bottom	200032594
2	3	28.047 lbmass	100007840	Door Component Steel Channel	200032596
3	1	3.134 lbmass	100007735	3048 LID GAP FILLER	200035660
4	2	7.540 lbmass	100007735	Door Component Steel Side Bar	200032593
5	1	4.096 lbmass	100007735	Door Component Steel Lap Bar 30in, 2.5" Stiffener Offset	200087242
6	1	1	100007647	LIFTING BRACKET STEEL LEAF	100007647

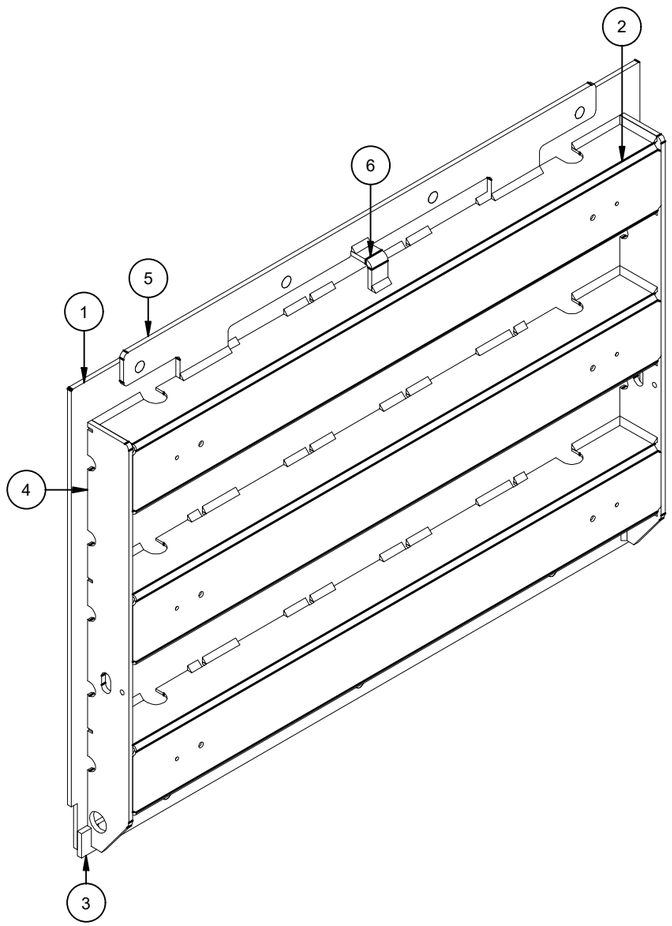

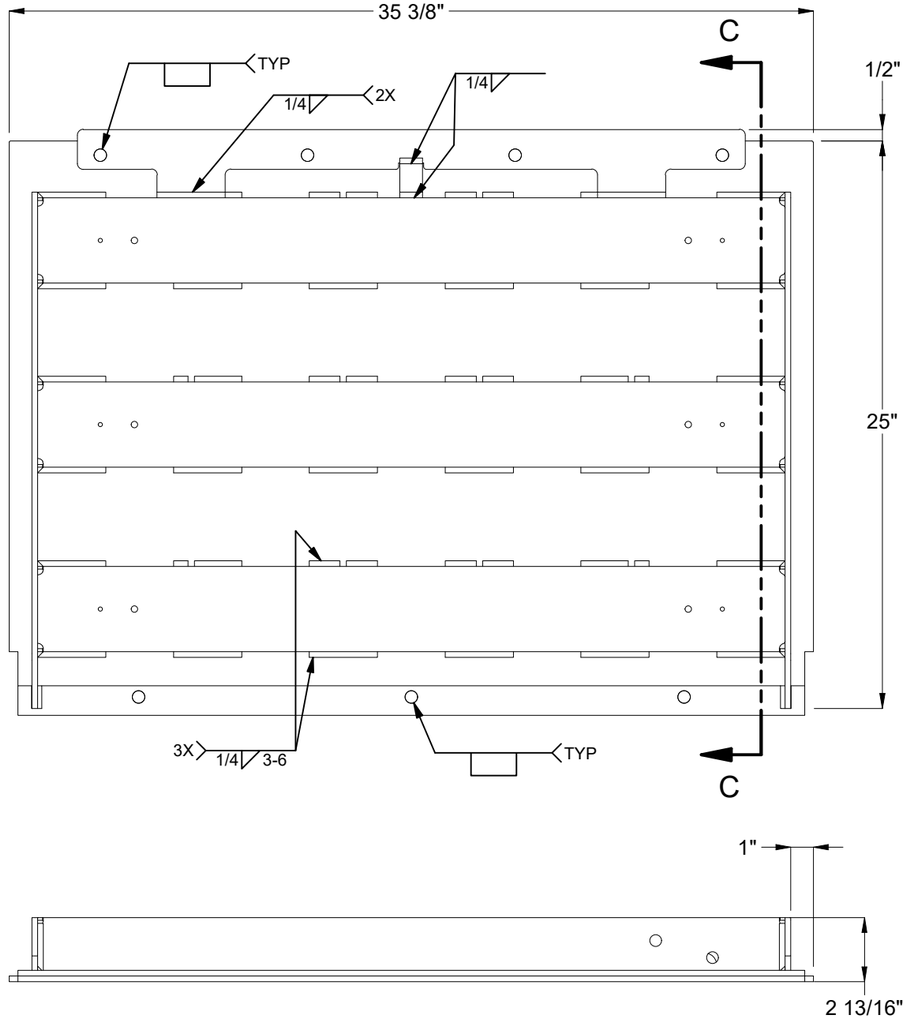

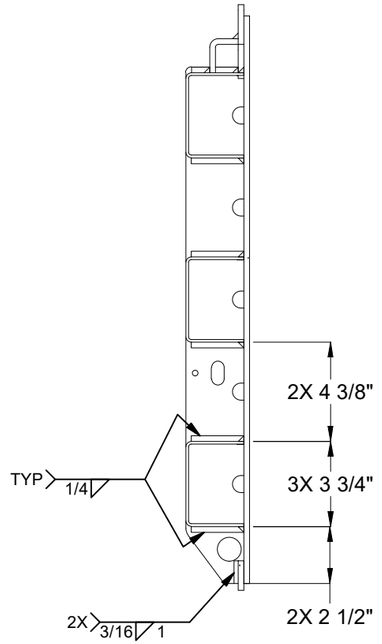

ROBOT DOOR
SYSTEM:100iB
S1:13-8
S2:64-63

MATERIAL FINISH: Raw	Infrastructure JENSEN 527 Dunn Circle, Sparks, NV 89431 775-352-2716 FAX: 755-358-8127 *JENSENMETALTECH.COM*	©2026 Jensen Infrastructure - All rights reserved. All materials appearing as Jensen Infrastructure documents and the like are proprietary work product and are protected under U.S. copyright and other laws. Unless in conjunction with business conducted with Jensen Infrastructure , any use of Jensen Infrastructure work product without express, written consent is prohibited, and recipient is prohibited from distributing any and all work product to non-approved third parties under penalty of civil action. This product shall only be produced in a Jensen Infrastructure facility.	PART NUMBER & DESCRIPTION: 200032590 DAS2-B-3048-H4-TRX-R-CL-LV-NVE-(RS-80) — REV: C-1-4
MATERIAL SURFACE: TraxPlate™			WEIGHT: 106.9 Lbs — DRAWN BY: R. Dohr — SHEET: 5
			CREATED: 11/21/2019 — MODIFIED: 8/28/2026

100013475.idw

BILL OF MATERIALS

ITEM	ITEM QTY	QTY	PART NUMBER	DESCRIPTION	PART NAME
1	1	60.519 lbmass	100007735	Door Component Steel Plate, Top Nameplate	200032597
2	3	28.047 lbmass	100007840	Door Component Steel Channel	200032596
3	1	3.134 lbmass	100007735	3048 LID GAP FILLER	200035660
4	2	7.540 lbmass	100007735	Door Component Steel Side Bar	200032593
5	1	1.876 lbmass	100007735	NAME PLATE BACKING PLATE	200091824
6	1	1	100007647	LIFTING BRACKET STEEL LEAF	100007647
7	2	2	100007970	CAM TOWER CAST STEEL	100007970
8	2	2	100007728	NUT SELF-CLINCH 1/2-13 S-0813-1 RAW	100007728

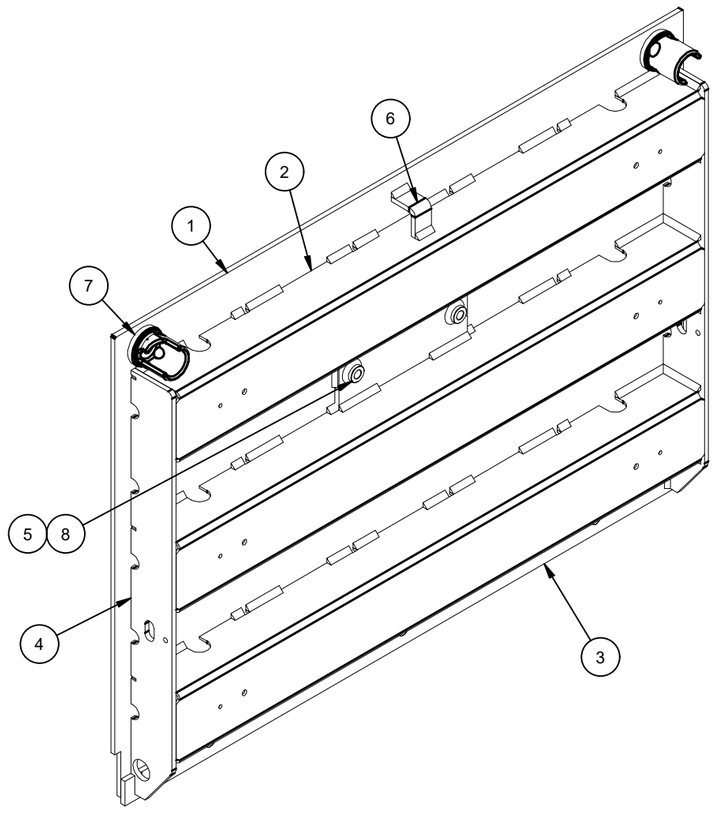

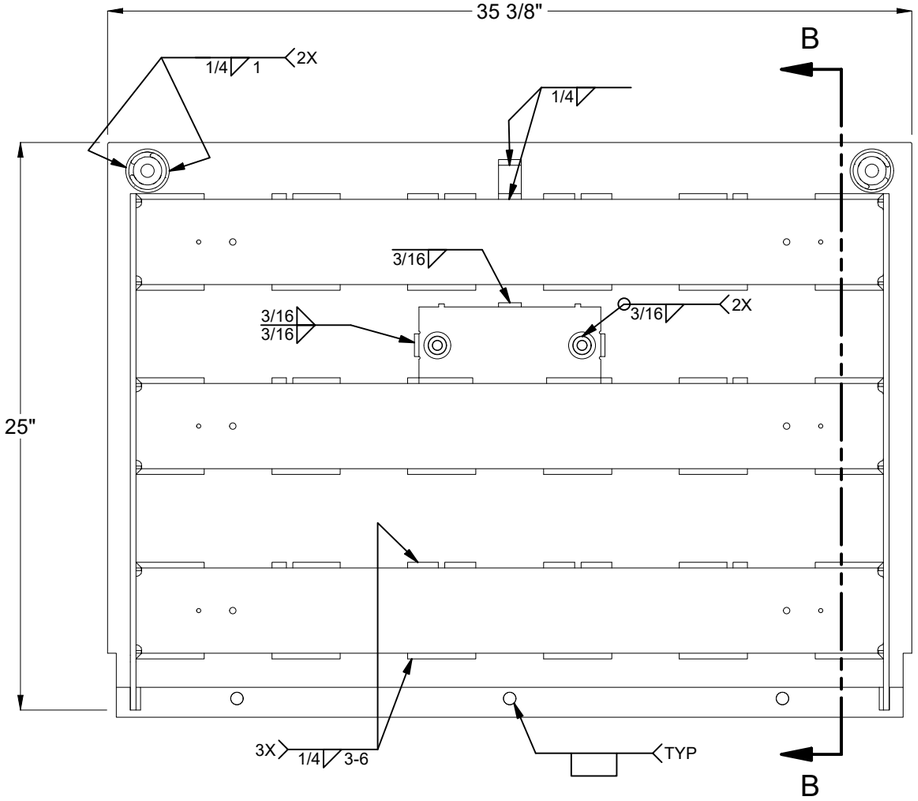

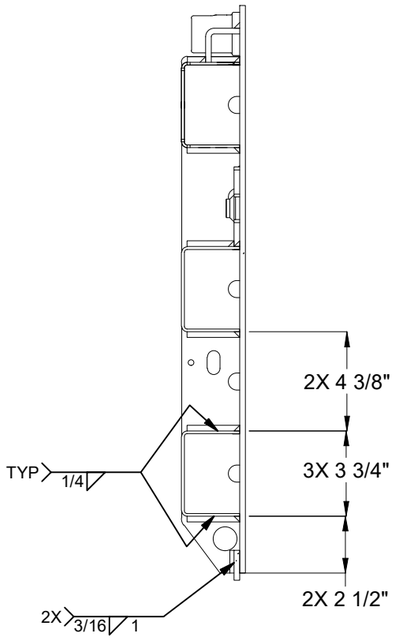

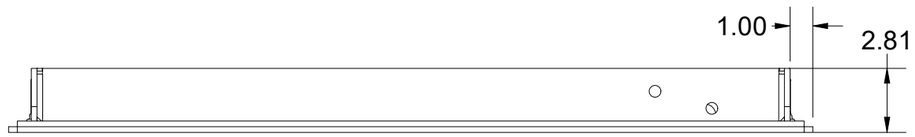

ROBOT DOOR
SYSTEM:100iB
S1:13-8
S2:64-63

MATERIAL FINISH: Raw	Infrastructure JENSEN 527 Dunn Circle, Sparks, NV 89431 775-352-2716 FAX: 755-358-8127 *JENSENMETALTECH.COM*	©2026 Jensen Infrastructure - All rights reserved. All materials appearing as Jensen Infrastructure documents and the like are proprietary work product and are protected under U.S. copyright and other laws. Unless in conjunction with business conducted with Jensen Infrastructure , any use of Jensen Infrastructure work product without express, written consent is prohibited, and recipient is prohibited from distributing any and all work product to non-approved third parties under penalty of civil action. This product shall only be produced in a Jensen Infrastructure facility.	PART NUMBER & DESCRIPTION: 200032591 DAS2-T-3048-H4-TRX-R-CL-LV-NVE-(RS-80)	REV: C-1-4
MATERIAL SURFACE: TraxPlate™			WEIGHT: 103.9 Lbs CREATED: 11/21/2019	DRAWN BY: R. Dohr MODIFIED: 8/28/2026	SHEET: 6

100013475.idw

BILL OF MATERIALS

ITEM	ITEM QTY	QTY	PART NUMBER	DESCRIPTION	PART NAME
1	2	48.064 lbmass	100007734	Frame Component Steel Frame Side, Adjustable	200032599
2	2	36.818 lbmass	100007734	Frame Component Steel Frame End, Adjustable	200032598
3	4	4	200018691	FRAME BOLT DOUBLER SLOT	200018691
4	2	2	200100755	Frame Cam Latch Catch Plate - 1/4" A36, Dual Door, 0.8125" Overhang	200100755
5	4	4	100007641	FRAME LIFTING BRACKET	100007641
6	4	4	100007009	HEX COIL NUT 1/2-6 PLAIN	100007009

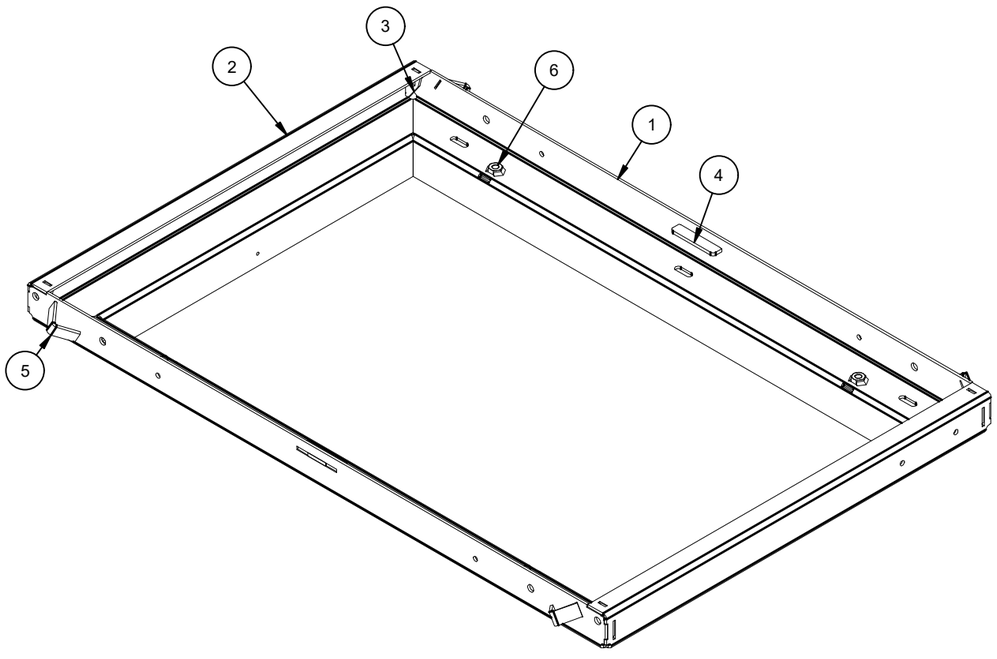

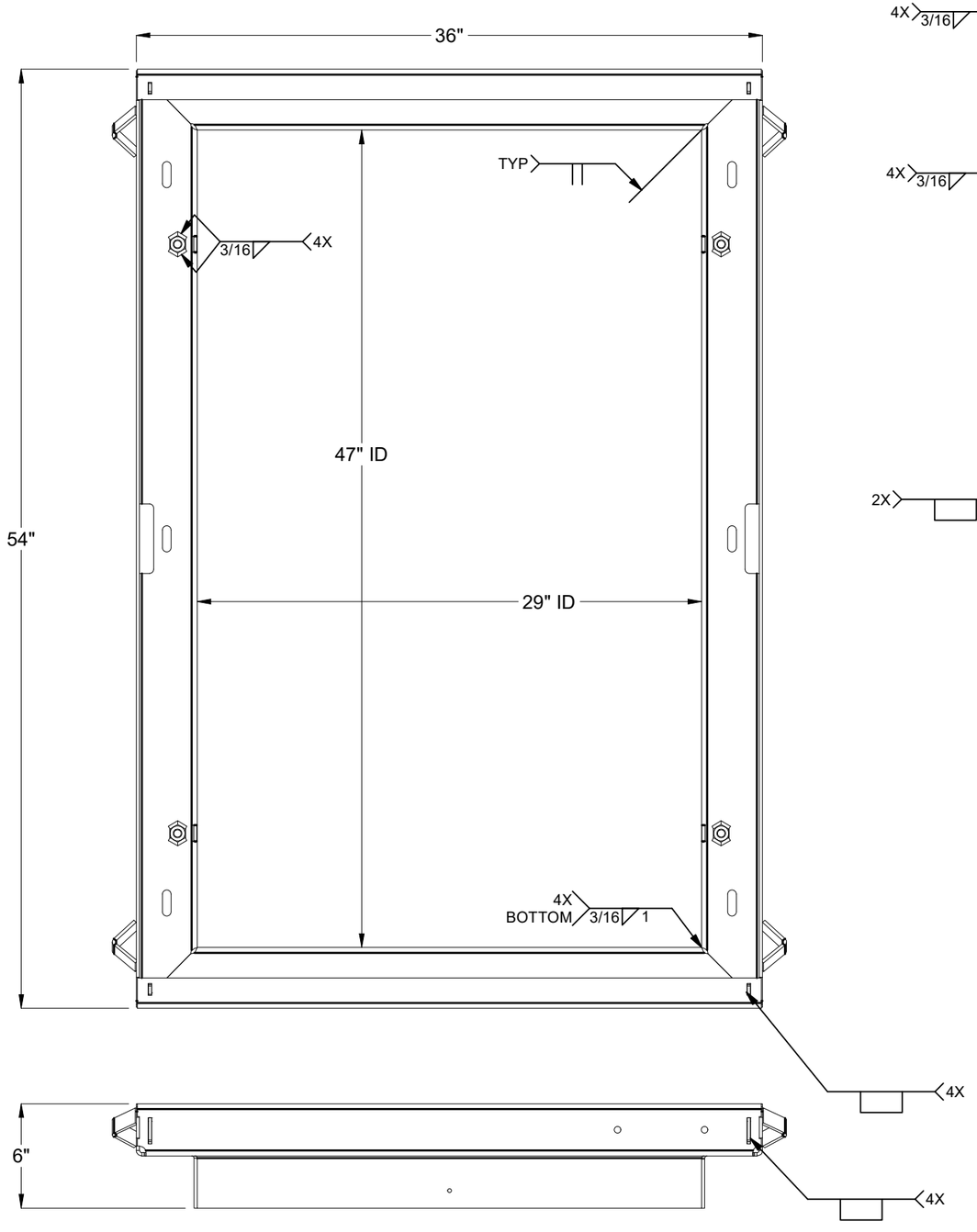

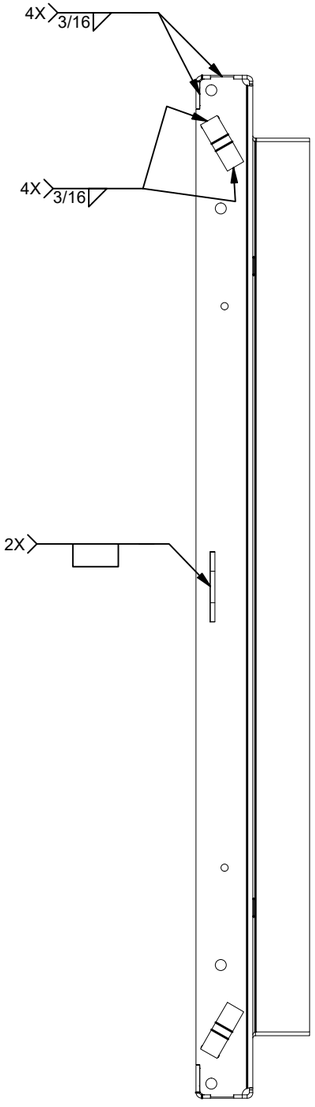

100013475.idw

MATERIAL FINISH: Raw	Infrastructure JENSEN 527 Dunn Circle, Sparks, NV 89431 775-352-2716 FAX: 755-358-8127 *JENSENMETALTECH.COM*	©2026 Jensen Infrastructure - All rights reserved. All materials appearing as Jensen Infrastructure documents and the like are proprietary work product and are protected under U.S. copyright and other laws. Unless in conjunction with business conducted with Jensen Infrastructure , any use of Jensen Infrastructure work product without express, written consent is prohibited, and recipient is prohibited from distributing any and all work product to non-approved third parties under penalty of civil action. This product shall only be produced in a Jensen Infrastructure facility.	PART NUMBER & DESCRIPTION: 200032592 FAS-3048-AH-R-LV-NVE-OH06-(RS-80)	REV: C-1-4
MATERIAL SURFACE: Smooth			WEIGHT: 140 Lbs CREATED: 11/21/2019	DRAWN BY: R. Dohr MODIFIED: 8/28/2026	SHEET: 7

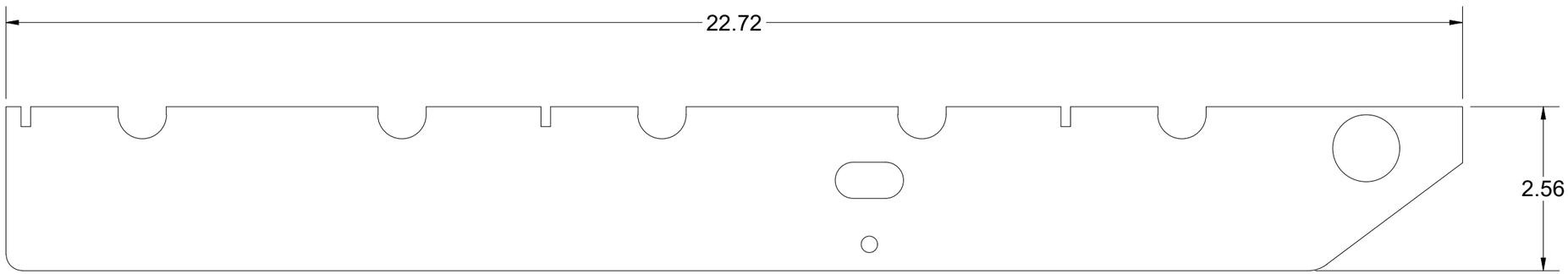



BEND TABLE			
BEND RADIUS	V-OPENING	BEND ANGLE	BEND DEDUCTION
-	-	- 0	-

MATERIAL IFS: 100007735

MATERIAL THK: 0.25

MAT DESCRIPTION: STL ASTM A36 SM-HRPO RAW .250

Infrastructure
JENSEN
527 Dunn Circle, Sparks, NV 89431
775-352-2716 FAX: 755-358-8127
JENSENMETALTECH.COM

©2026 Jensen Infrastructure - All rights reserved.
All materials appearing as Jensen Infrastructure documents and the like are proprietary work product and are protected under U.S. copyright and other laws. Unless in conjunction with business conducted with Jensen Infrastructure , any use of Jensen Infrastructure work product without express, written consent is prohibited, and recipient is prohibited from distributing any and all work product to non-approved third parties under penalty of civil action.
This product shall only be produced in a Jensen Infrastructure facility.

NAME & DESCRIPTION: 200032593
Door Component Steel Side Bar

REV: C-1-4

WEIGHT: 3.770 lbmass

DRAWN BY: R. Dohr

CREATED: 11/21/2019

MODIFIED: 8/28/2026

SHEET: 8 OF 16

100013475.idw

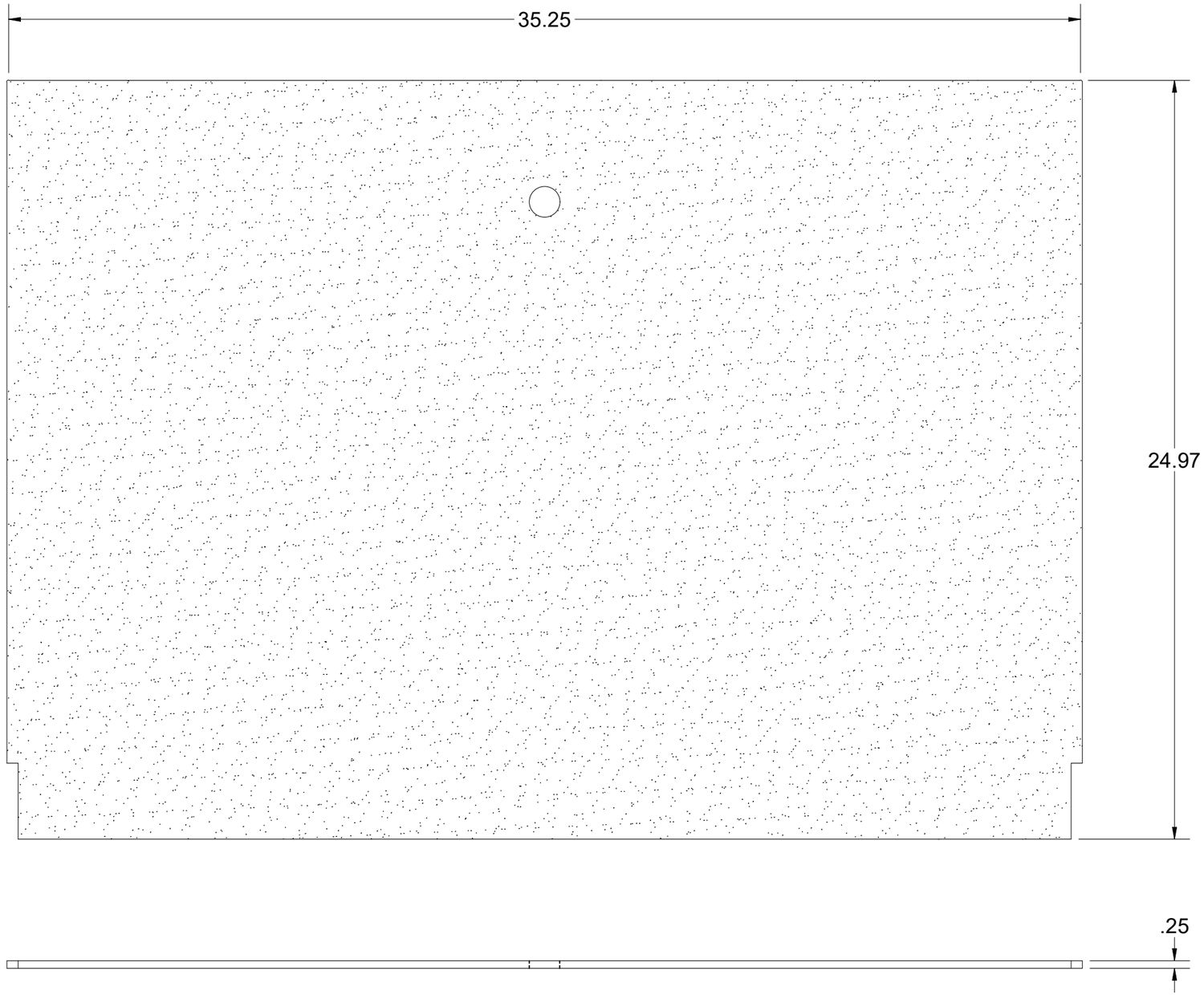

BEND TABLE				MATERIAL IFS: 100007735
BEND RADIUS	V-OPENING	BEND ANGLE	BEND DEDUCTION	MATERIAL THK: 0.25
-	-	- 0	-	MAT DESCRIPTION: STL ASTM A36 SM-HRPO RAW .250

Infrastructure JENSEN
527 Dunn Circle, Sparks, NV 89431
775-352-2716 FAX: 755-358-8127
JENSENMETALTECH.COM

©2026 Jensen Infrastructure - All rights reserved.
All materials appearing as Jensen Infrastructure documents and the like are proprietary work product and are protected under U.S. copyright and other laws.
Unless in conjunction with business conducted with Jensen Infrastructure , any use of Jensen Infrastructure work product without express, written consent is prohibited, and recipient is prohibited from distributing any and all work product to non-approved third parties under penalty of civil action.
This product shall only be produced in a Jensen Infrastructure facility.

NAME & DESCRIPTION:	200032594 Door Component Steel Plate, Bottom	REV: C-1-4
WEIGHT: 62.523 lbmass	DRAWN BY: R. Dohr	SHEET: 9 OF 16
CREATED: 11/21/2019	MODIFIED: 8/28/2026	

100013475.idw

ASYMMETRIC

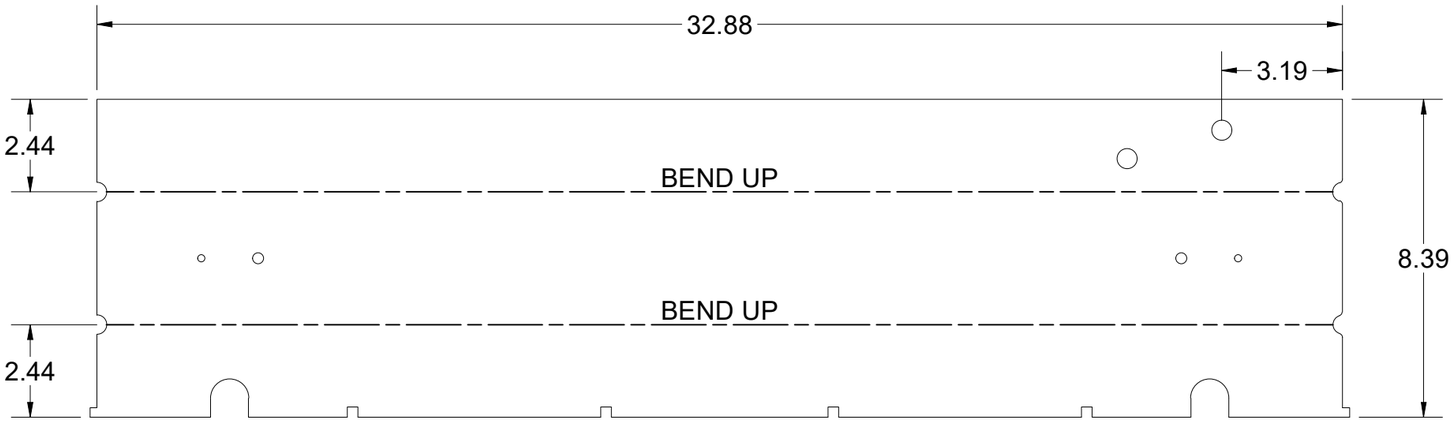

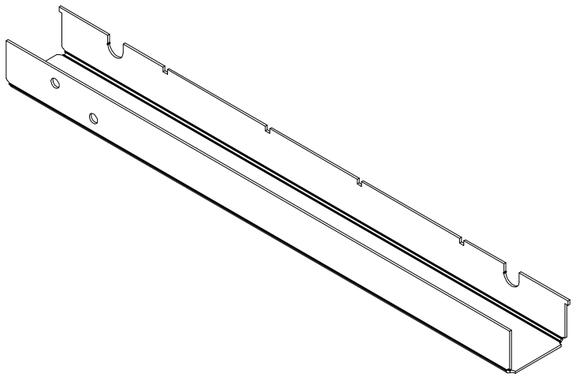

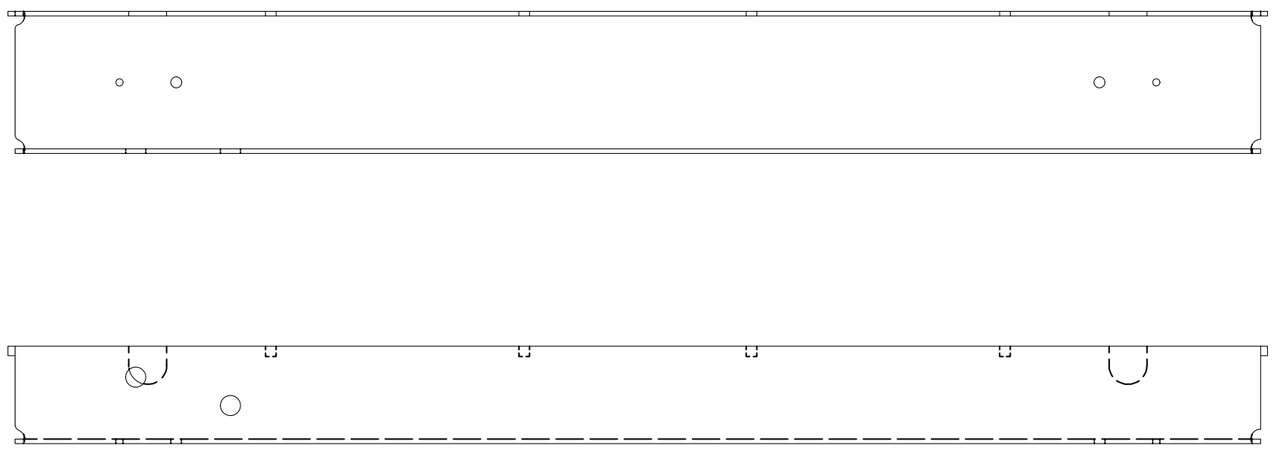

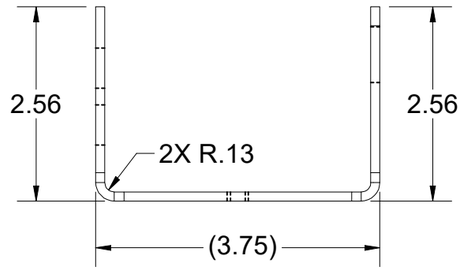

BEND TABLE			
BEND RADIUS	V-OPENING	BEND ANGLE	BEND DEDUCTION
0.125	2	90	0.243

MATERIAL IFS: 100007840

MATERIAL THK: 0.1196

MAT DESCRIPTION: SHT STL GR80 GA-11 SM-HR RAW .1196

Infrastructure JENSEN

527 Dunn Circle, Sparks, NV 89431
775-352-2716 FAX: 755-358-8127
JENSENMETALTECH.COM

©2026 Jensen Infrastructure - All rights reserved. All materials appearing as Jensen Infrastructure documents and the like are proprietary work product and are protected under U.S. copyright and other laws. Unless in conjunction with business conducted with Jensen Infrastructure , any use of Jensen Infrastructure work product without express, written consent is prohibited, and recipient is prohibited from distributing any and all work product to non-approved third parties under penalty of civil action. This product shall only be produced in a Jensen Infrastructure facility.

NAME & DESCRIPTION: 200032596 Door Component Steel Channel

REV: C-1-4

WEIGHT: 9.349 lbmass

DRAWN BY: R. Dohr

CREATED: 11/21/2019

MODIFIED: 8/28/2026

SHEET: 10 OF 16

100013475.idw

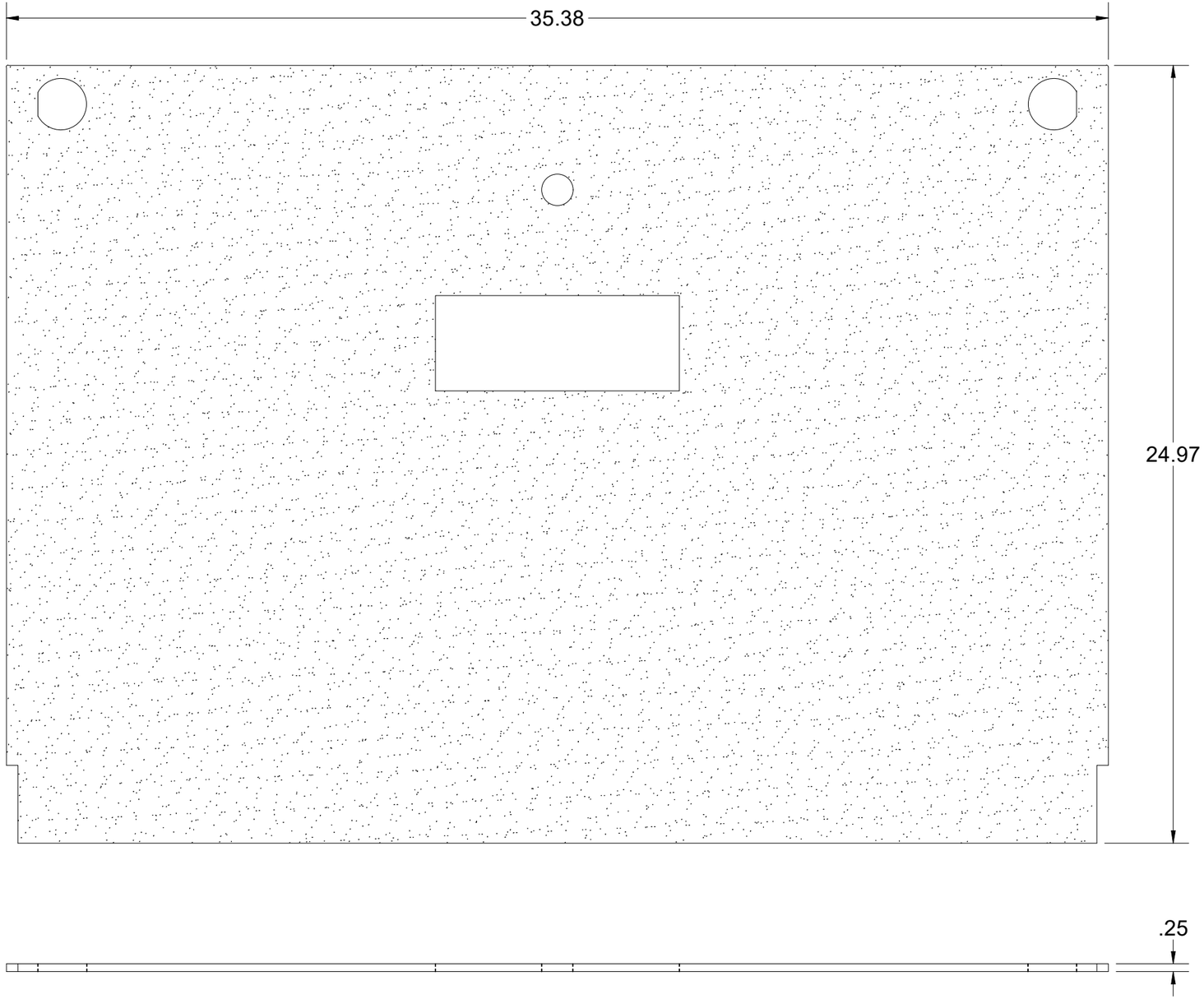

BEND TABLE				MATERIAL IFS: 100007735			
BEND RADIUS	V-OPENING	BEND ANGLE	BEND DEDUCTION	MATERIAL THK: 0.25			
-	-	- 0	-	MAT DESCRIPTION: STL ASTM A36 SM-HRPO RAW .250			

Infrastructure
JENSEN
527 Dunn Circle, Sparks, NV 89431
775-352-2716 FAX: 755-358-8127
JENSENMETALTECH.COM

©2026 Jensen Infrastructure - All rights reserved.
All materials appearing as Jensen Infrastructure documents and the like are proprietary work product and are protected under U.S. copyright and other laws. Unless in conjunction with business conducted with Jensen Infrastructure , any use of Jensen Infrastructure work product without express, written consent is prohibited, and recipient is prohibited from distributing any and all work product to non-approved third parties under penalty of civil action.
This product shall only be produced in a Jensen Infrastructure facility.

NAME & DESCRIPTION: 200032597 Door Component Steel Plate, Top Nameplate		REV: C-1-4
WEIGHT: 60.519 lbmass	DRAWN BY: R. Dohr	SHEET: 11 OF 16
CREATED: 11/21/2019	MODIFIED: 8/28/2026	

100013475.idw

ASYMMETRIC

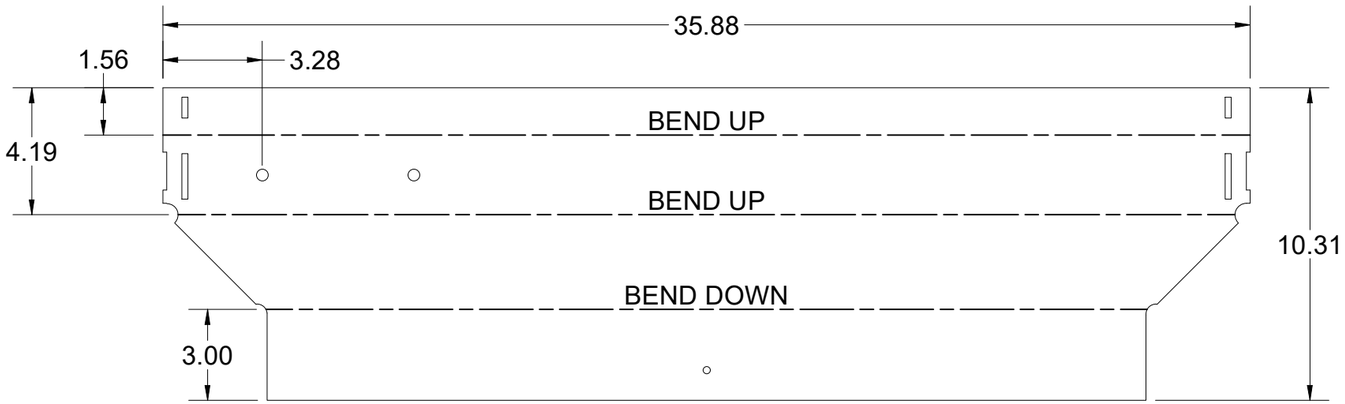

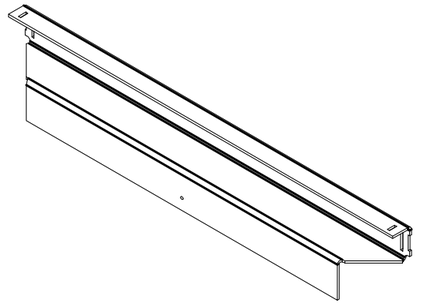

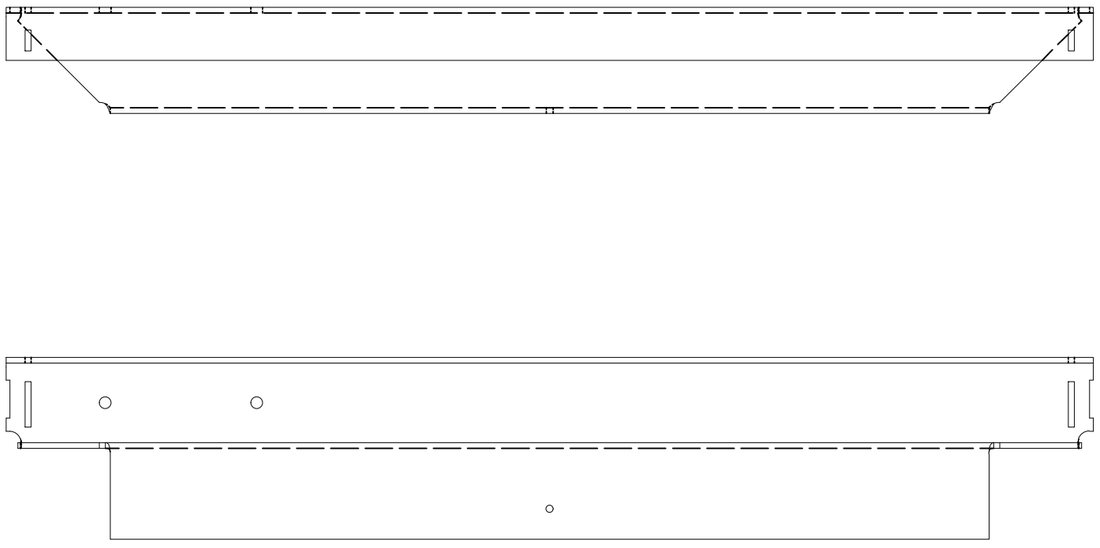

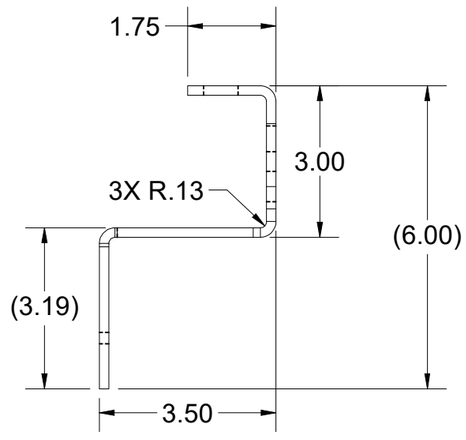

BEND TABLE				MATERIAL IFS: 100007734
BEND RADIUS	V-OPENING	BEND ANGLE	BEND DEDUCTION	MATERIAL THK: 0.1875
0.125	2	90	0.375	MAT DESCRIPTION: STL ASTM A36 SM-HRPO 60X120 RAW .1875

Infrastructure
JENSEN
527 Dunn Circle, Sparks, NV 89431
775-352-2716 FAX: 755-358-8127
JENSENMETALTECH.COM

©2026 Jensen Infrastructure - All rights reserved. All materials appearing as Jensen Infrastructure documents and the like are proprietary work product and are protected under U.S. copyright and other laws. Unless in conjunction with business conducted with Jensen Infrastructure , any use of Jensen Infrastructure work product without express, written consent is prohibited, and recipient is prohibited from distributing any and all work product to non-approved third parties under penalty of civil action. This product shall only be produced in a Jensen Infrastructure facility.

NAME & DESCRIPTION: 200032598 Frame Component Steel Frame End, Adjustable		REV: C-1-4
WEIGHT: 18.409 lbmass	DRAWN BY: R. Dohr	SHEET: 12 OF 16
CREATED: 11/21/2019	MODIFIED: 8/28/2026	

100013475.idw

SYMMETRIC

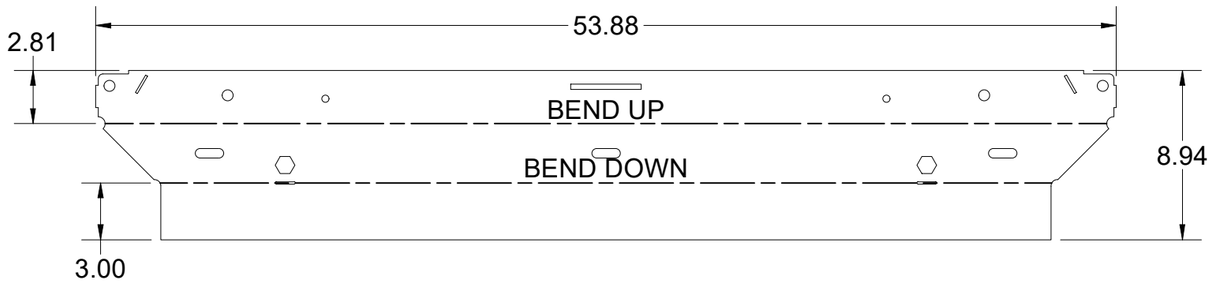

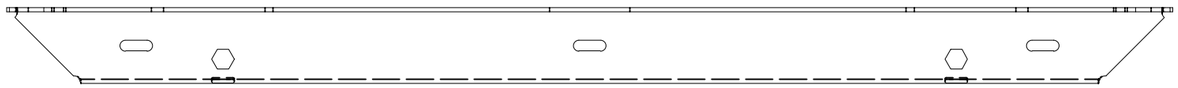

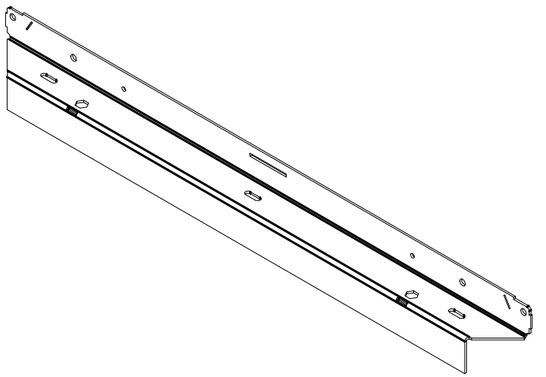

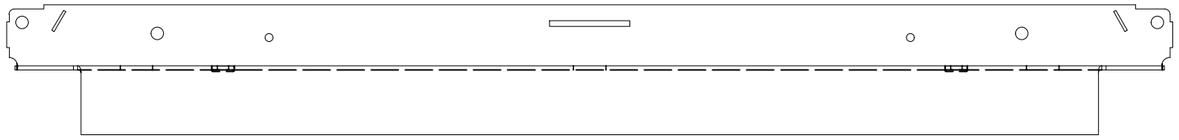

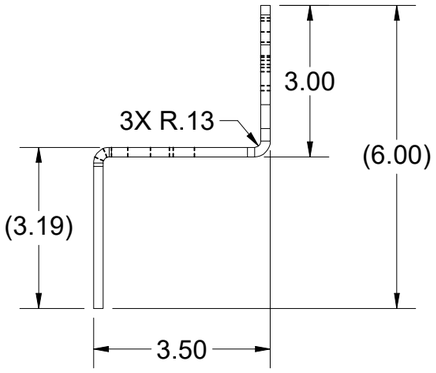

BEND TABLE				MATERIAL IFS: 100007734
BEND RADIUS	V-OPENING	BEND ANGLE	BEND DEDUCTION	MATERIAL THK: 0.1875
0.125	2	90	0.375	MAT DESCRIPTION: STL ASTM A36 SM-HRPO 60X120 RAW .1875

Infrastructure JENSEN

527 Dunn Circle, Sparks, NV 89431
775-352-2716 FAX: 755-358-8127
JENSENMETALTECH.COM

©2026 Jensen Infrastructure - All rights reserved.
All materials appearing as Jensen Infrastructure documents and the like are proprietary work product and are protected under U.S. copyright and other laws. Unless in conjunction with business conducted with Jensen Infrastructure , any use of Jensen Infrastructure work product without express, written consent is prohibited, and recipient is prohibited from distributing any and all work product to non-approved third parties under penalty of civil action.
This product shall only be produced in a Jensen Infrastructure facility.

NAME & DESCRIPTION:	200032599 Frame Component Steel Frame Side, Adjustable	REV: C-1-4
WEIGHT: 24.032 lbmass	DRAWN BY: R. Dohr	SHEET: 13 OF 16
CREATED: 11/21/2019	MODIFIED: 8/28/2026	

100013475.idw

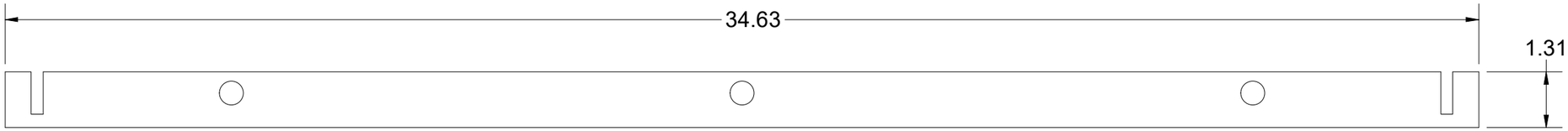

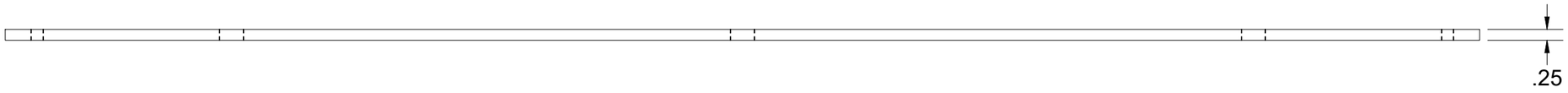

BEND TABLE			
BEND RADIUS	V-OPENING	BEND ANGLE	BEND DEDUCTION
-	-	- 0	-

MATERIAL IFS: 100007735

MATERIAL THK: 0.25

MAT DESCRIPTION: STL ASTM A36 SM-HRPO RAW .250

Infrastructure
JENSEN
527 Dunn Circle, Sparks, NV 89431
775-352-2716 FAX: 755-358-8127
JENSENMETALTECH.COM

©2026 Jensen Infrastructure - All rights reserved.
All materials appearing as Jensen Infrastructure documents and the like are proprietary work product and are protected under U.S. copyright and other laws. Unless in conjunction with business conducted with Jensen Infrastructure , any use of Jensen Infrastructure work product without express, written consent is prohibited, and recipient is prohibited from distributing any and all work product to non-approved third parties under penalty of civil action.
This product shall only be produced in a Jensen Infrastructure facility.

NAME & DESCRIPTION: 200035660
3048 LID GAP FILLER

REV: C-1-4

WEIGHT: 3.134 lbmass

DRAWN BY: R. Dohr

CREATED: 11/21/2019

MODIFIED: 8/28/2026

SHEET: 14 OF 16

100013475.idw

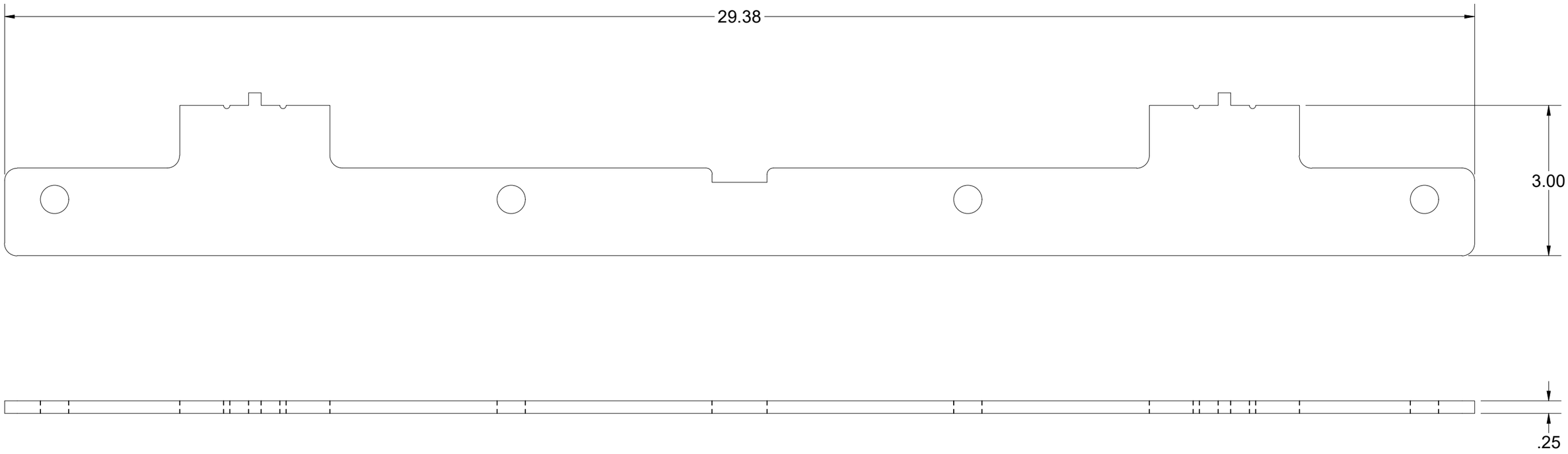

BEND TABLE				MATERIAL IFS: 100007735
BEND RADIUS	V-OPENING	BEND ANGLE	BEND DEDUCTION	MATERIAL THK: 0.25
-	-	-	-	MAT DESCRIPTION: STL ASTM A36 SM-HRPO RAW .250

Infrastructure
JENSEN
527 Dunn Circle, Sparks, NV 89431
775-352-2716 FAX: 755-358-8127
JENSENMETALTECH.COM

©2026 Jensen Infrastructure - All rights reserved.
All materials appearing as Jensen Infrastructure documents and the like are proprietary work product and are protected under U.S. copyright and other laws. Unless in conjunction with business conducted with Jensen Infrastructure , any use of Jensen Infrastructure work product without express, written consent is prohibited, and recipient is prohibited from distributing any and all work product to non-approved third parties under penalty of civil action.
This product shall only be produced in a Jensen Infrastructure facility.

NAME & DESCRIPTION: 200087242 Door Component Steel Lap Bar 30in, 2.5" Stiffener Offset		REV: C-1-4
WEIGHT: 4.096 lbmass	DRAWN BY: R. Dohr	SHEET: 15 OF 16
CREATED: 11/21/2019	MODIFIED: 8/28/2026	

100013475.idw

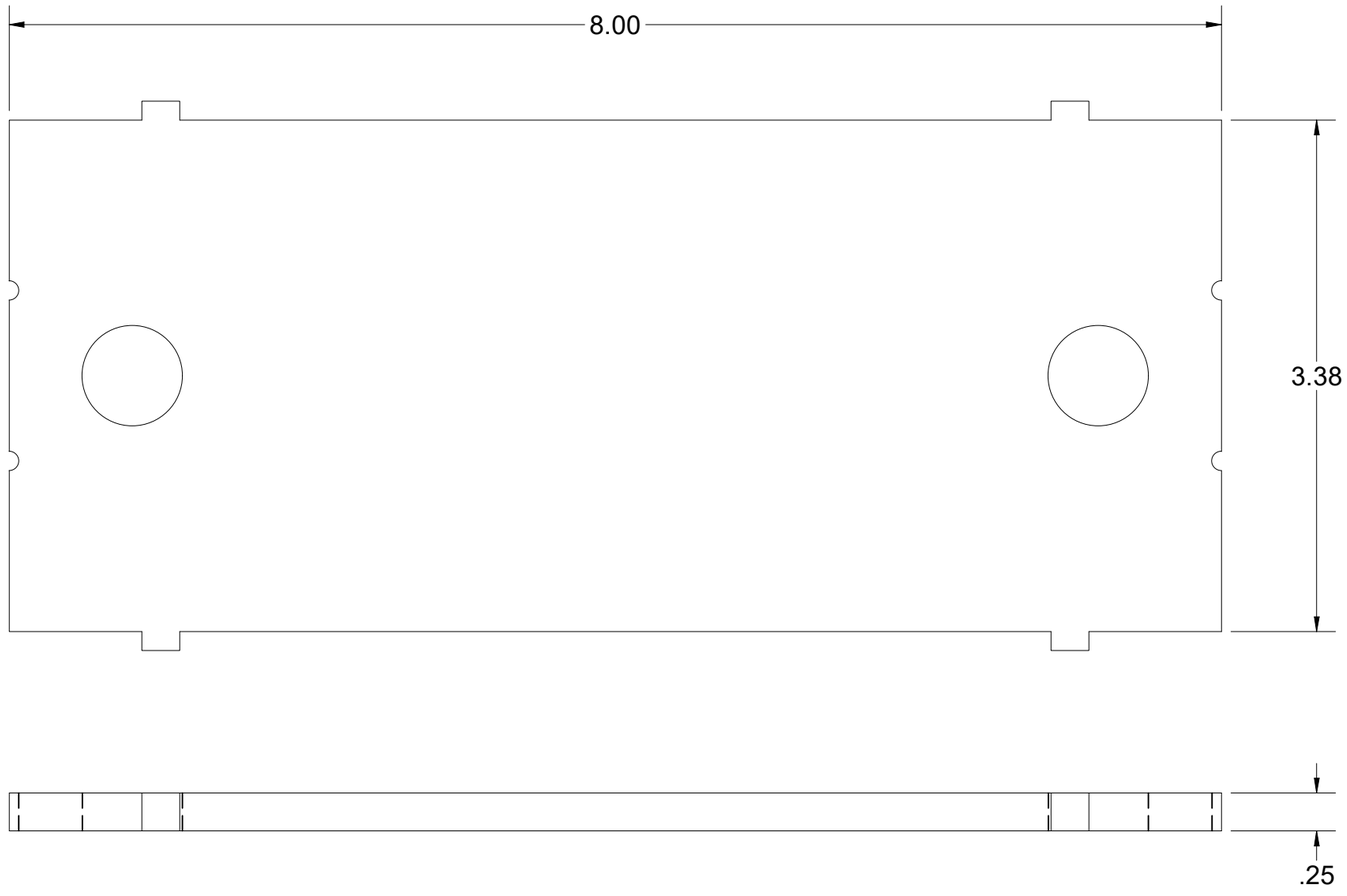

BEND TABLE				MATERIAL IFS: 100007735
BEND RADIUS	V-OPENING	BEND ANGLE	BEND DEDUCTION	MATERIAL THK: 0.25
-	-	- 0	-	MAT DESCRIPTION: STL ASTM A36 SM-HRPO RAW .250

Infrastructure
JENSEN
527 Dunn Circle, Sparks, NV 89431
775-352-2716 FAX: 755-358-8127
JENSENMETALTECH.COM

©2026 Jensen Infrastructure - All rights reserved.
All materials appearing as Jensen Infrastructure documents and the like are proprietary work product and are protected under U.S. copyright and other laws. Unless in conjunction with business conducted with Jensen Infrastructure , any use of Jensen Infrastructure work product without express, written consent is prohibited, and recipient is prohibited from distributing any and all work product to non-approved third parties under penalty of civil action.
This product shall only be produced in a Jensen Infrastructure facility.

NAME & DESCRIPTION:	200091824 NAME PLATE BACKING PLATE	REV: C-1-4
WEIGHT: 1.876 lbmass	DRAWN BY: R. Dohr	SHEET: 16 OF 16
CREATED: 11/21/2019	MODIFIED: 8/28/2026	

100013475.idw