NOTES
■ FOR COMPLETE DESIGN AND PRODUCT INFORMATION CONTACT JENSEN PRECAST.

BILL OF MATERIALS

ITEM	UNIT QTY	QTY	PART NUMBER	DESCRIPTION
1	10.843 ft^3	10.843 ft^3	100023549	CONCRETE 5000 PSI 36 SCC ADOT
2	1	1	100009220	COVER 3333 TRF STEEL GALV 31A62PLH INWESCO - ADOT FMS
3	1	1	200068320	REINFORCING MAT 200068320
4	1	4	100004878	ANCHOR UTILITY .671DIA 5-SLAB GALV P75 5UA671

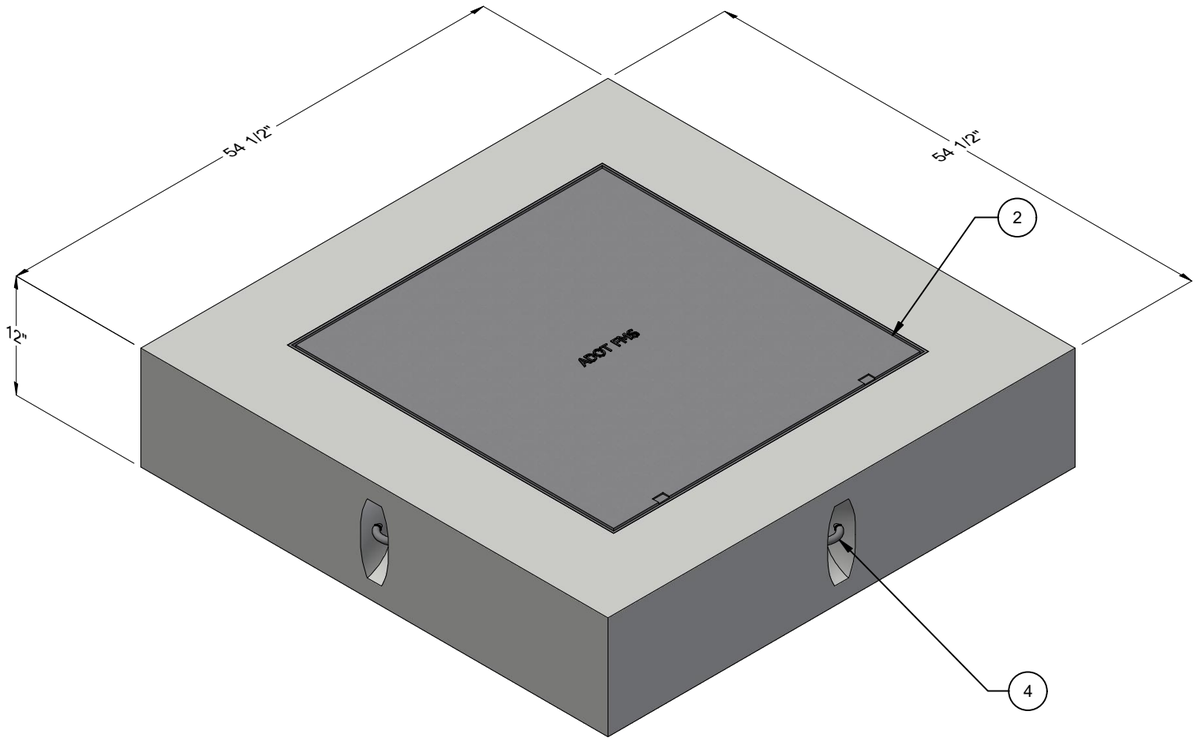

ISO REF

LIFTING NOTES
■ THIS CONCRETE PRODUCT IS DESIGNED TO BE LIFTED AT 2500 PSI WITH 4 LIFT CONNECTIONS EQUALLY LOADED TO 2 LIFTING POINTS AT 90° SLING ANGLE, MEASURED FROM HORIZONTAL.

BURY DEPTH:	0.0' - 0.0' to Top		
WATER LEVEL:	Below Structure	APPROX. WEIGHT:	1861.31 Lbs
DESIGN SPEC:	ASTM C857,ACI 318	LOADING SPEC:	A-16 (AASHTO HS20-44)
REINFORCEMENT TYPE:	Rebar	LIFTING TYPE:	A-Anchor

JENSEN PRECAST EST. 1968

WWW.JENSENPRECAST.COM

©2022 Jensen Precast- All rights reserved.
All materials appearing as Jensen Precast documents and the like are proprietary work product and are protected under U.S. copyright and other laws.
Unless in conjunction with business conducted with Jensen Precast, any use of Jensen Precast work product without express, written consent is prohibited, and recipient is prohibited from distributing any and all work product to non-approved third parties under penalty of civil action.

CHANGE HISTORY			
NO.	DESCRIPTION	DATE	BY
A	LEGACY DRAWING	-	-
B	REVISION - LIFTING AND REINFORCING	9/15/22	MLR/RM

DESCRIPTION:	Vault 4242x10 Slab Top 33"x33"C Cast-In Cover ADOT FMS CASTING LAYOUT		REV: B-2
PART NUMBER:	100013391	DRAWN BY: MLR	SHEET: 1 OF 2
CREATED:	10/18/2016	MODIFIED: 9/15/2022	

100013391.idw

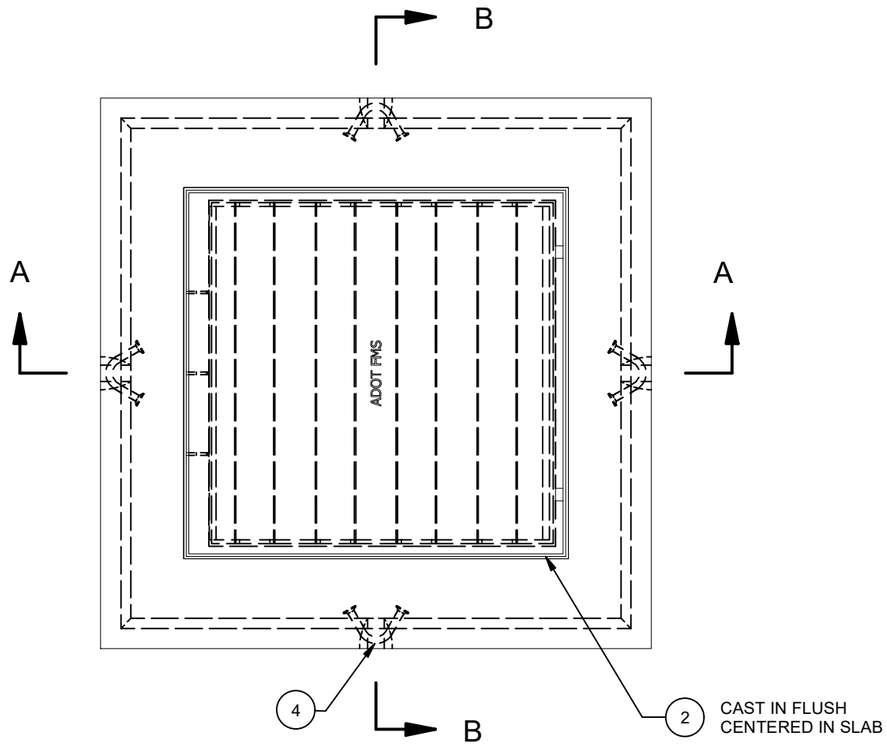

PLAN VIEW

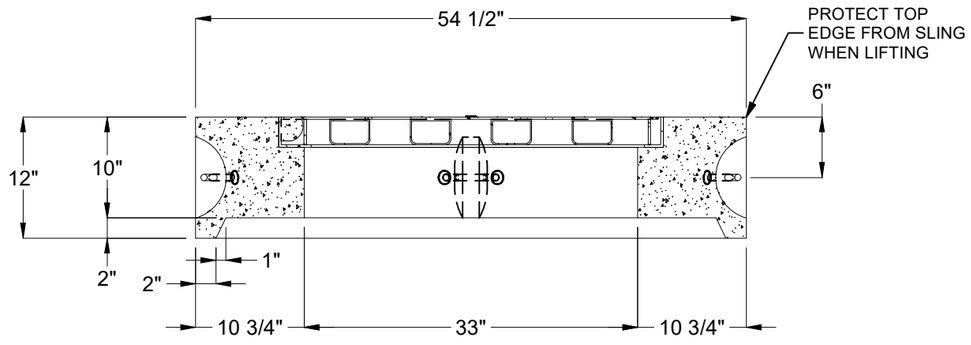

SECTION A-A

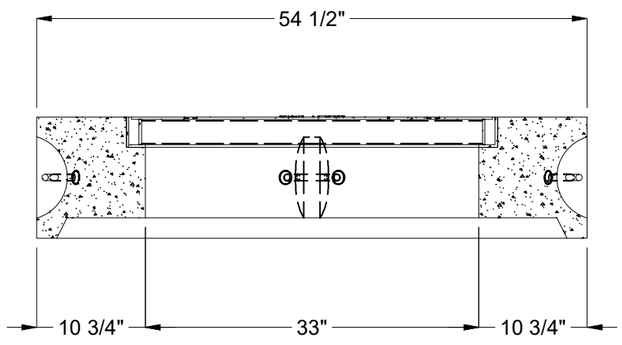

SECTION B-B

BURY DEPTH:	0.0' - 0.0' to Top		
WATER LEVEL:	Below Structure	APPROX. WEIGHT:	1861.31 Lbs
DESIGN SPEC:	ASTM C857,ACI 318	LOADING SPEC:	A-16 (AASHTO HS20-44)
REINFORCEMENT TYPE:	Rebar	LIFTING TYPE:	A-Anchor

JENSEN PRECAST EST. 1968

WWW.JENSENPRECAST.COM

©2022 Jensen Precast- All rights reserved.
All materials appearing as Jensen Precast documents and the like are proprietary work product and are protected under U.S. copyright and other laws.
Unless in conjunction with business conducted with Jensen Precast, any use of Jensen Precast work product without express, written consent is prohibited, and recipient is prohibited from distributing any and all work product to non-approved third parties under penalty of civil action.

DESCRIPTION:	Vault 4242x10 Slab Top 33"x33"C Cast-In Cover ADOT FMS CASTING DRAWING		REV: B-2
PART NUMBER:	100013391	DRAWN BY:	MLR
CREATED:	10/18/2016	MODIFIED:	9/15/2022

SHEET: 2 OF 2

100013391.idw