NOTES:

- STANDARDS. AASHTO LRFD BRIDGE DESIGN SPECIFICATIONS, 8TH EDITION, WITH 2022 CALTRANS AMENDMENTS, CITY OF LOS ANGELES BUREAU OF ENGINEERING STANDARD PLAN S-601, LATEST, MANUAL PART H, LADWP P 178, ASTM C-857. STRUCTURAL CALCS FOR BOX: #33718B.
- MATERIAL. CONCRETE, F'c=5,500 PSI. MIX TO INCLUDE FLY ASH AND DCI. REINFORCEMENT PER ASTM A-706, Fy=60,000.
- LOADS. VERTICAL LIVE LOAD: AASHTO HL-93. LIVE LOAD SURCHARGE: PER LA BOE PART H, FIGURE H 374.2A. MINIMUM 80 PSF (TO BOTTOM OF VAULT) OR LADWP P 178 (104 PSF). SOIL LATERAL LOADS: 40 PCF (DRY), 81 PCF (SATURATED), SATURATED SOIL CONDITIONS 3'-0" BELOW GRADE. SOIL BEARING CAPACITY = 1,500 PSF. DESIGN SOIL DENSITY IS 120 PCF.
- LOADS NOT INCLUDED. DESIGN DOES NOT INCLUDE COOPER E-80 RAILROAD LOADS OR LATERAL OR SURCHARGE LOADS THAT ARE PRODUCED BY FOOTING OR FOUNDATIONS ADJACENT TO THE STRUCTURE. THIS SUBSTRUCTURE SHALL BE KEPT AT LEAST IN A 1:1 RATIO AWAY FROM ALL FOOTINGS AND FOUNDATIONS, UNLESS THE ENGINEER OF RECORD APPROVES IN WRITING.
- INSTALLATION. VAULT TO BE PLACED ON WELL COMPACTED SOIL WITH MIN. 6" DEPTH OF TAMPED CRUSHED AGGREGATE BASE FOR EASE OF INSTALLATION AND EVEN LOAD DISTRIBUTION USING A VIBRATORY PLATE COMPACTOR IN A MIN. OF TWO PASSES. BASE TO EXTEND 12" BEYOND THE STRUCTURE. BASE MATERIAL IN ACCORDANCE WITH SECTION 200-2.2 OF THE SSPWC (GREEN BOOK) PER LADWP SPECIFICATION NO. 104.
- VAULTS LONGITUDINAL DIRECTION (14' LENGTH) SHALL BE INSTALLED PARALLEL TO THE TRAVEL DIRECTION OF THE STREET TO AVOID INTERFERENCE WITH ADJACENT UTILITIES.
- EACH CONCRETE SECTION SHALL BE MARKED ON THE INSIDE & OUTSIDE WITH "JENSEN", THE DESIGNATION "DWP/FA-CN", AND THE DATE OF THE POUR.
- EACH CONCRETE SECTION SHALL HAVE CAST-IN ON THE INSIDE "JENSEN", THE YEAR, AND THE DESIGNATION "FA-CN".
- NO SHARP OR ROUGH EDGES ON THE TERMINATORS ENTERING THE VAULT.
- K45-VN12-12T VAULT NECK AND COVER, WITH APPROVED CAST IRON COVER TO BE USED WITH THIS VAULT.
- EACH PIECE TO BE STENCILIED WITH ITS PART NO.
- MINIMUM EXCAVATION SIZE: 10'-2" X 16'-2" X DEPTH REQ'D.
- DO NOT BREAK 18" X 18" KNOCKOUT UNTIL VAULT IS SET.

BILL OF MATERIALS

ITEM	UNIT QTY	QTY	PART NUMBER	DESCRIPTION	MASS (lb)
1	1	1	100013011	Tunnel Vault TV96112 Center - Groove Groove 96Wx112Hx96L LADWP H-171	24934
2	1	1	100009767	Tunnel Vault TV96112 End - Tongue 96Wx112Hx36L Knockout,Terminators LADWP H-171 BT	18179
3	1	1	100009765	Tunnel Vault TV96112 End - Tongue 96Wx112Hx36L Knockout,Terminators LADWP H-171 AT	18179
4	1	8	100007114	ROD THREADED COIL YELLOW DIP 3/4 X 20"	
5	1	16	100008121	WASHER 3X3X.5 W.875 HOLE GALV	
6	1	16	100007010	HEX COIL NUT 3/4-4.5 POST YELLOW DIP	
7	1	6	100006063	STRUT SLOTTED C-CHANNEL 1-5/8 X 1-5/8 12GA BOLT-ON GALV 22IN	
8	1	4	100006065	STRUT SLOTTED C-CHANNEL 1-5/8 X 1-5/8 12GA BOLT-ON GALV 36IN	
9	1	6	100006069	STRUT SLOTTED C-CHANNEL 1-5/8 X 1-5/8 12GA BOLT-ON GALV 92IN	
10	1	60	100007767	WASHER FLAT 1/2 REGULAR 1.25 OD 304SS	
11	1	60	100008101	SCREW BUTT HEAD CAP 1/2-12 2 304SS	
12	4.000 gal	4.000 gal	100006420	COATING PAINT LATEX WHITE	
13	1.000 ul	1.000 ul	100005749	SEALANT JOINT BUTYL RUBBER ASTM C-990 AND M198 CS-102 1IN EQUIV X14.5FT PER BOX 118FT	

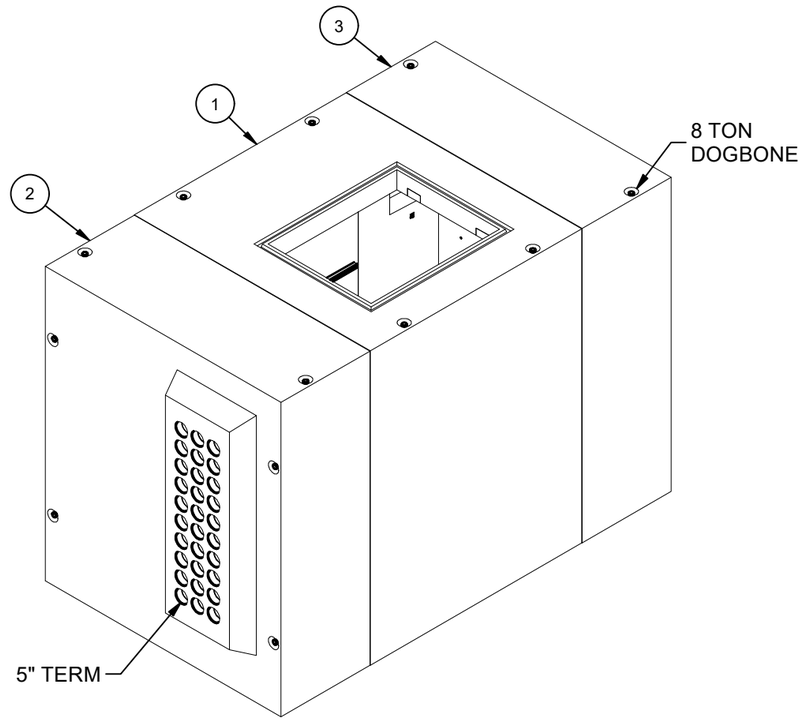

ISO VIEW

100013330.idw

LIFTING NOTES

- THIS CONCRETE PRODUCT IS DESIGNED TO BE LIFTED WITH 4 EQUALLY LOADED RIGGINGS LEGS MIN. 90° SLING ANGLE, MEASURED FROM HORIZONTAL.

BURY DEPTH:	1.0' - 4.0' to Top		
WATER LEVEL:	3.0'	APPROX. WEIGHT:	61444.18 Lbs
DESIGN SPEC:	ASTM C857,ACI 318	LOADING SPEC:	AASHTO HL-93
AGENCY:	LADWP	AGENCY SPEC:	H-171 G-1A-14'

Infrastructure
JENSEN
WWW.JENSENINFRASTRUCTURE.COM

©2026 Jensen Infrastructure - All rights reserved.
All materials appearing as Jensen Infrastructure documents and the like are proprietary work product and are protected under U.S. copyright and other laws.
Unless in conjunction with business conducted with Jensen Infrastructure, any use of Jensen Infrastructure work product without express, written consent is prohibited, and recipient is prohibited from distributing any and all work product to non-approved third parties under penalty of civil action.
This product shall only be produced in a Jensen Infrastructure facility.

REVISION HISTORY

REV	DESCRIPTION	DATE	APPROVED
C-1-1	ADDED STRUT CHANNEL AND HARWARE	10/13/2026	

DESCRIPTION: Tunnel Vault 96112 Layout Assembly LADWP H-171 G-1A-14' Int. Coating - White Latex Paint LAYOUT REVIEW			REV: C-1-1
PART NUMBER:	100013330	DRAWN BY: J. Prado	SHEET: 1 OF 2
CREATED:	10/17/2022	MODIFIED:	10/13/2026

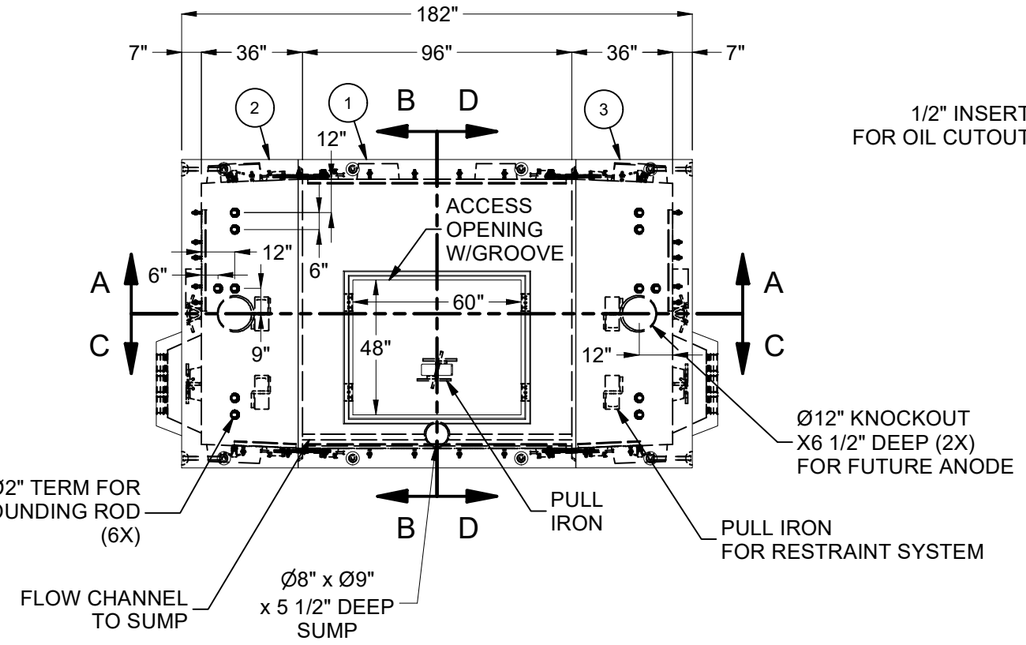

PLAN VIEW

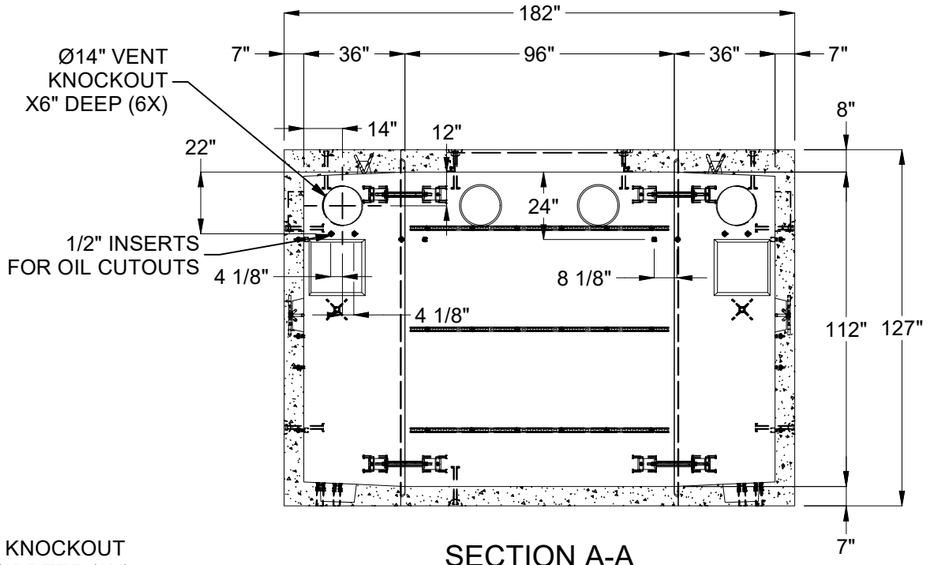

SECTION A-A

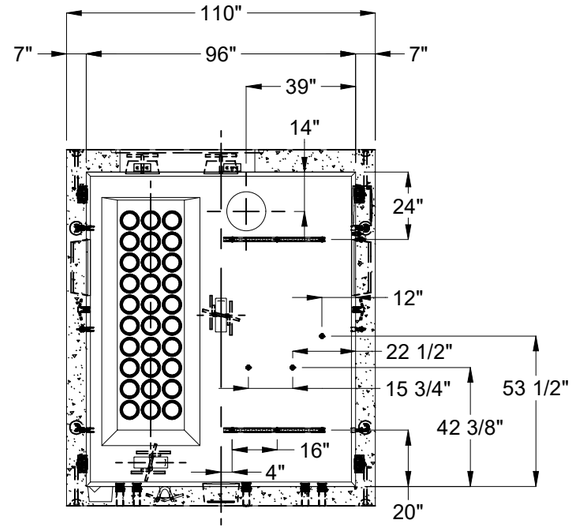

SECTION B-B

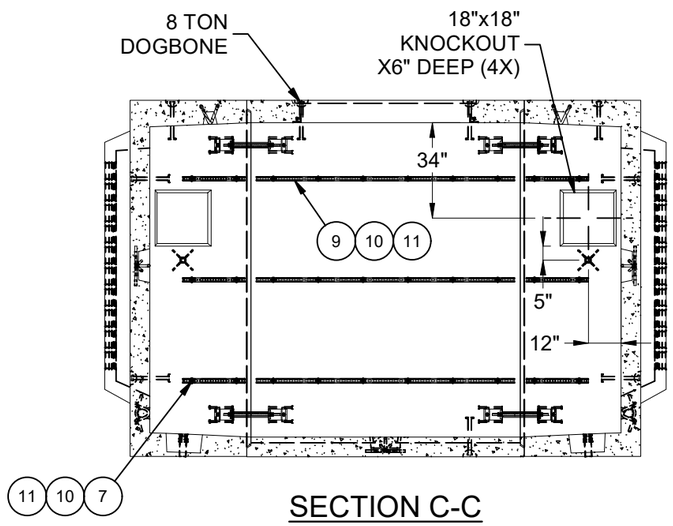

SECTION C-C

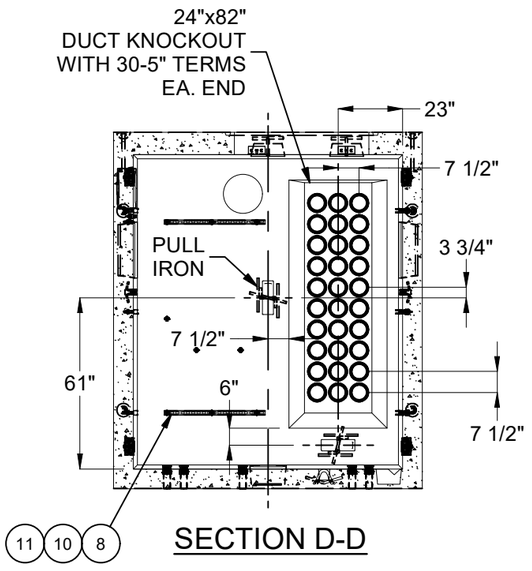

SECTION D-D

BURY DEPTH:	1.0' - 4.0' to Top		
WATER LEVEL:	3.0'	APPROX. WEIGHT:	61444.18 Lbs
DESIGN SPEC:	ASTM C857,ACI 318	LOADING SPEC:	AASHTO HL-93
AGENCY:	LADWP	AGENCY SPEC:	H-171 G-1A-14'

Infrastructure
JENSEN
WWW.JENSENINFRASTRUCTURE.COM

©2026 Jensen Infrastructure - All rights reserved.
All materials appearing as Jensen Infrastructure documents and the like are proprietary work product and are protected under U.S. copyright and other laws.
Unless in conjunction with business conducted with Jensen Infrastructure, any use of Jensen Infrastructure work product without express, written consent is prohibited, and recipient is prohibited from distributing any and all work product to non-approved third parties under penalty of civil action.
This product shall only be produced in a Jensen Infrastructure facility.

DESCRIPTION:	Tunnel Vault 96112 Layout Assembly LADWP H-171 G-1A-14' Int. Coating - White Latex Paint LAYOUT REVIEW		REV: C-1-1
PART NUMBER:	100013330	DRAWN BY:	J. Prado
CREATED:	10/17/2022	MODIFIED:	10/13/2026
			SHEET: 2 OF 2

100013330.idw