NOTES
■ ALL PARTS TO BE STENCILED: MFG DATE / JOB NUMBER / PRODUCT ID / WEIGHT.
■ STENCIL "GRD" IN RED LETTERS

BILL OF MATERIALS

ITEM	UNIT QTY	QTY	PART NUMBER	DESCRIPTION
1	165.993 ft^3	165.993 ft^3	100006029	CONCRETE 5500 PSI SCC ED
2	1	4	100002879	ANCHOR DOGBONE P52 8T X 4-3/4" GALV
3	1	4	100002963	ANCHOR EYE DOGBONE P53 8T X 7-1/16" GALV
4	1	4	100028399	ANCHOR SWIFT LIFT TENSION BAR 8T 2500PSI DAYTON P60
5	1	24	100005936	TERMINATOR DUCT WITH SEAL 5IN T5001
6	1	4	100003026	PULL IRON OFFSET .875DIA 6H X 5W X 10.875L GALV
7	1	28	100012720	INSERT PLASTIC W/ BREAK OFF SNAP 0.5IN
8	1	2	100005932	INSERT GROUND BRONZE BOTTLE ROCKET 1/2-13 UNC WITH 11IN COPPER ROD 12H69
9	1	1	300129592	REINFORCING MAT 300129592

100013308.idw

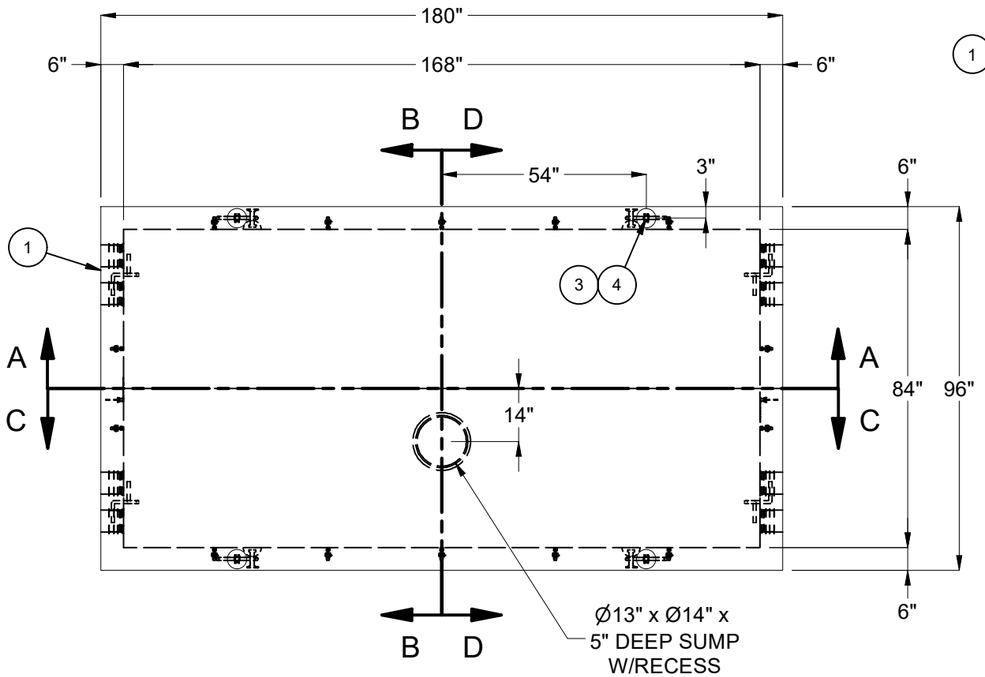

PLAN VIEW

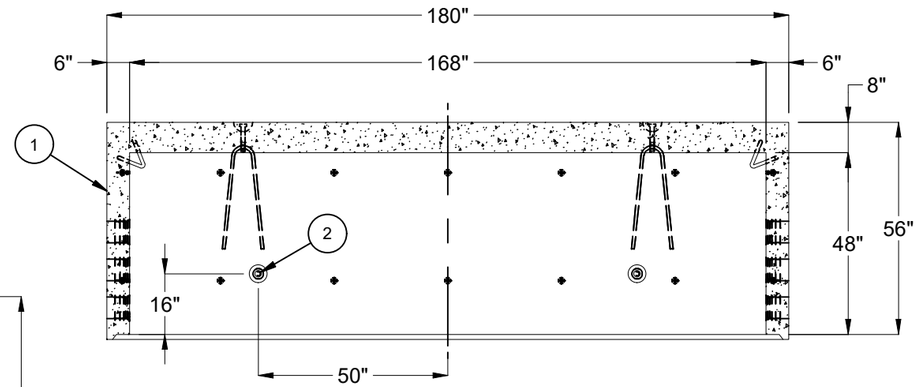

SECTION A-A

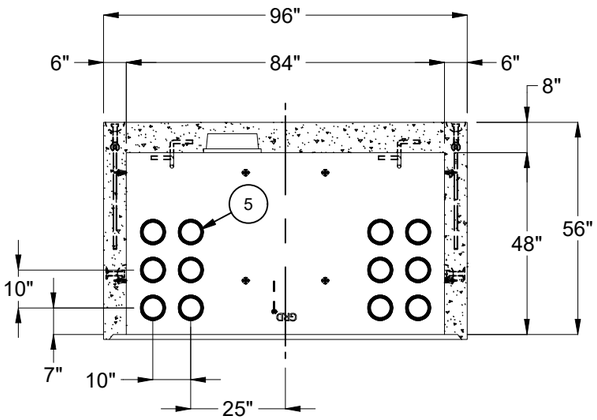

SECTION B-B

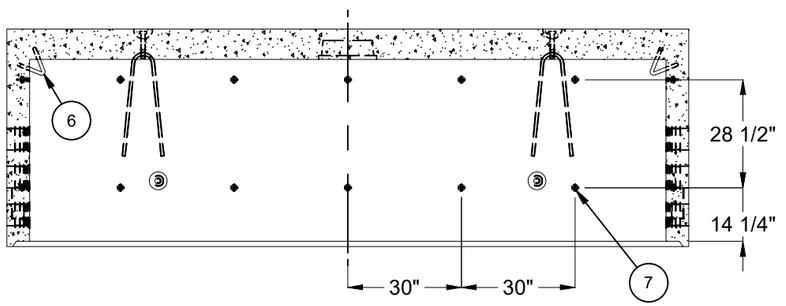

SECTION C-C

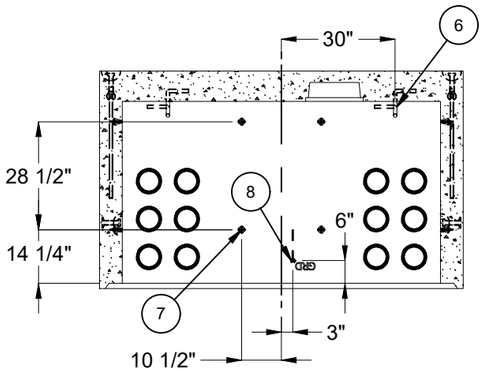

SECTION D-D

LIFTING NOTES
■ DEMOLDING: THIS CONCRETE PRODUCT IS DESIGNED TO BE LIFTED AT 2,500 PSI WITH 4 LIFT CONNECTIONS EQUALLY LOADED TO 4 LIFTING POINTS AT A MINIMUM 90° SLING ANGLE, MEASURED FROM HORIZONTAL.
■ INSTALLATION: THIS CONCRETE PRODUCT IS DESIGNED TO BE LIFTED AT 5,500 PSI WITH 4 LIFT CONNECTIONS EQUALLY LOADED TO 4 LIFTING POINTS AT A MINIMUM 60° SLING ANGLE, MEASURED FROM HORIZONTAL.

REVISION HISTORY			
REV	DESCRIPTION	DATE	APPROVED
B-1	INITIAL RELEASE INVENTOR	2/21/2023	

BURY DEPTH:	6.3' - 8.8' to Top		
WATER LEVEL:	3.0'	APPROX. WEIGHT:	24982.28 Lbs
DESIGN SPEC:	ACI 318,ASTM C857	LOADING SPEC:	A-16 (AASHTO HS20-44)
REINFORCEMENT TYPE:	Rebar	LIFTING TYPE:	Dogbone

JENSEN PRECAST EST. 1968

WWW.JENSENPRECAST.COM

©2023 Jensen Precast- All rights reserved.
All materials appearing as Jensen Precast documents and the like are proprietary work product and are protected under U.S. copyright and other laws.
Unless in conjunction with business conducted with Jensen Precast, any use of Jensen Precast work product without express, written consent is prohibited, and recipient is prohibited from distributing any and all work product to non-approved third parties under penalty of civil action.

DESCRIPTION:	Vault 84168x48 Rect. Bottom Section Terminators Sump EDISON UGS VA 410 CASTING LAYOUT		REV: B-1
PART NUMBER:	100013308	DRAWN BY:	J. Prado
CREATED:	2/21/2023	MODIFIED:	2/21/2023
			SHEET: 1 OF 1