NOTES
■ ALL PARTS TO BE STENCILED: MFG DATE / JOB NUMBER / PRODUCT ID / WEIGHT.
■ EACH CONCRETE SECTION SHALL HAVE CAST-IN ON THE INSIDE "JENSEN", THE YEAR, AND THE DESIGNATION "FA-CN" OR "F-CN-SC" IF SCC MIX USED.

BILL OF MATERIALS

ITEM	UNIT QTY	QTY	PART NUMBER	DESCRIPTION
1	167.709 ft^3	167.709 ft^3	100006028	CONCRETE 5500 PSI #17 SCC LADWP
2	1	4	100002882	ANCHOR DOGBONE P52 8T X 13-3/8" GALV
3	1	4	100002880	ANCHOR DOGBONE P52 8T X 6-3/4" GALV
4	1	14	100012720	INSERT PLASTIC W/ BREAK OFF SNAP 0.5IN
5	1	12	100003010	TERMINATOR DUCT WITH SEAL 2IN T2001
6	1	1	100005940	PULL IRON OFFSET WITH REBAR .875DIA 4.5H 316SS LADWP
7	1	2	100005939	PULL IRON OFFSET WITH REBAR .875DIA 4.5H GALV LADWP
8	8.500 in	102.000 in	100013798	PIPE PVC SCH 40 2IN DIA
9	1	1	100018345	REINFORCING MAT 100018345

100012997.idw

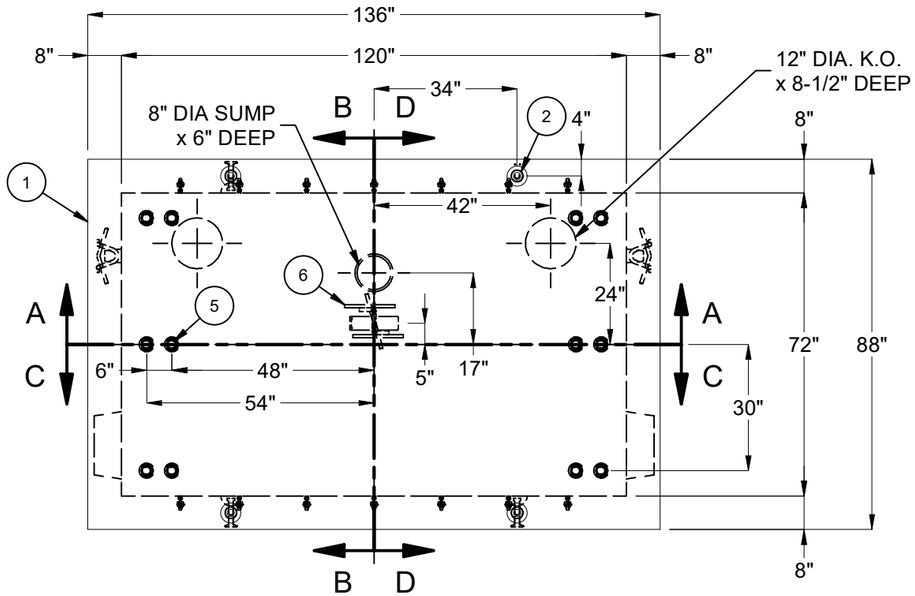

PLAN VIEW

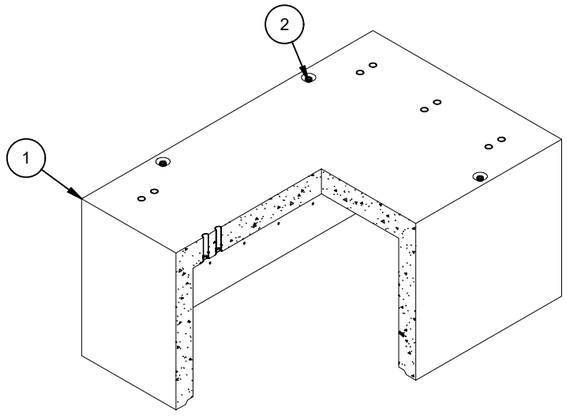

ISOMETRIC VIEW

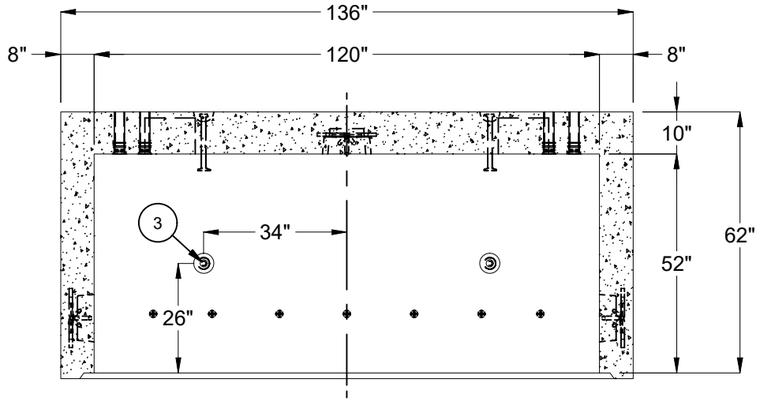

SECTION A-A

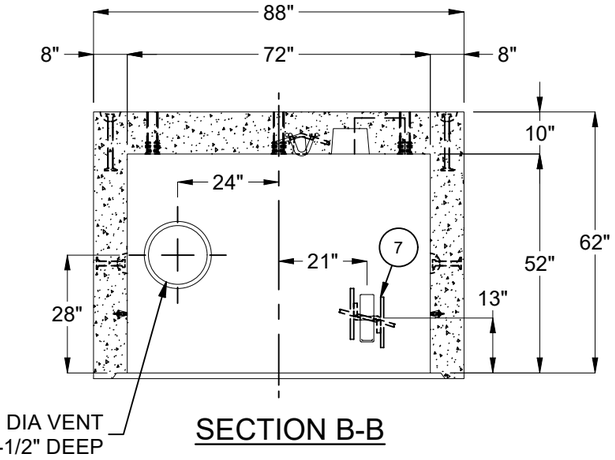

SECTION B-B

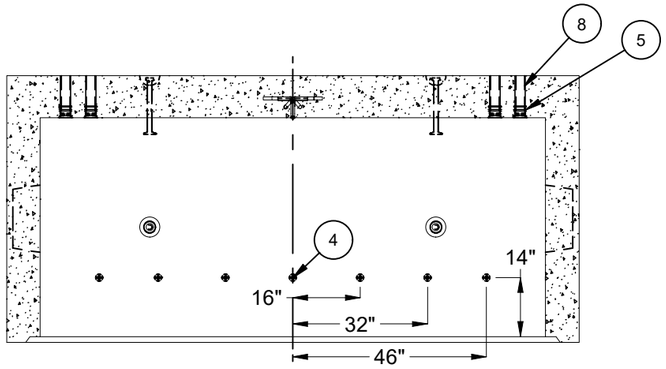

SECTION C-C

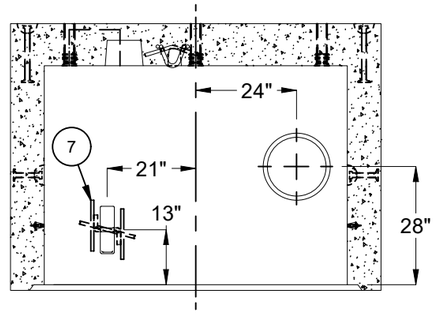

SECTION D-D

LIFTING NOTES
■ DEMOLDING: THIS CONCRETE PRODUCT IS DESIGNED TO BE LIFTED AT 2,500 PSI WITH 4 LIFT CONNECTIONS EQUALLY LOADED TO 4 LIFTING POINTS AT A MINIMUM 90° SLING ANGLE, MEASURED FROM HORIZONTAL.
■ INSTALLATION: THIS CONCRETE PRODUCT IS DESIGNED TO BE LIFTED AT 5,500 PSI WITH 4 LIFT CONNECTIONS EQUALLY LOADED TO 4 LIFTING POINTS AT A MINIMUM 60° SLING ANGLE, MEASURED FROM HORIZONTAL.

BURY DEPTH:	7.3' - 9.8' to Top		
WATER LEVEL:	3.0'	APPROX. WEIGHT:	25258.02 Lbs
DESIGN SPEC:	AASHTO LRFD,ASTM C857	LOADING SPEC:	AASHTO HL-93
REINFORCEMENT TYPE:	Rebar	LIFTING TYPE:	Dogbone

JENSEN PRECAST EST. 1968

WWW.JENSENPRECAST.COM

©2023 Jensen Precast- All rights reserved.
All materials appearing as Jensen Precast documents and the like are proprietary work product and are protected under U.S. copyright and other laws.
Unless in conjunction with business conducted with Jensen Precast, any use of Jensen Precast work product without express, written consent is prohibited, and recipient is prohibited from distributing any and all work product to non-approved third parties under penalty of civil action.

REVISION HISTORY			
REV	DESCRIPTION	DATE	APPROVED
C	REMOVED IDENCIA TAG & CHANGED CONCRETE MIX	10/23/2023	

DESCRIPTION:	Vault 72120x52 Rect. Bottom Section Sump LADWP G-284 G-4 CASTING LAYOUT		REV: C-1
PART NUMBER:	100012997	DRAWN BY:	J. Prado
CREATED:	6/26/2019	MODIFIED:	10/23/2023
			SHEET: 1 OF 1