BILL OF MATERIALS

ITEM	UNIT QTY	QTY	PART NUMBER	DESCRIPTION
1	1	1	200018497	NAME PLATE RAW



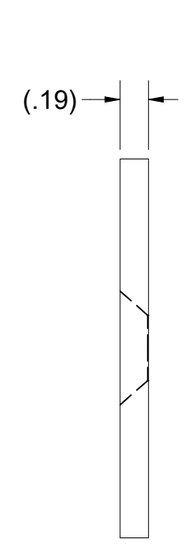

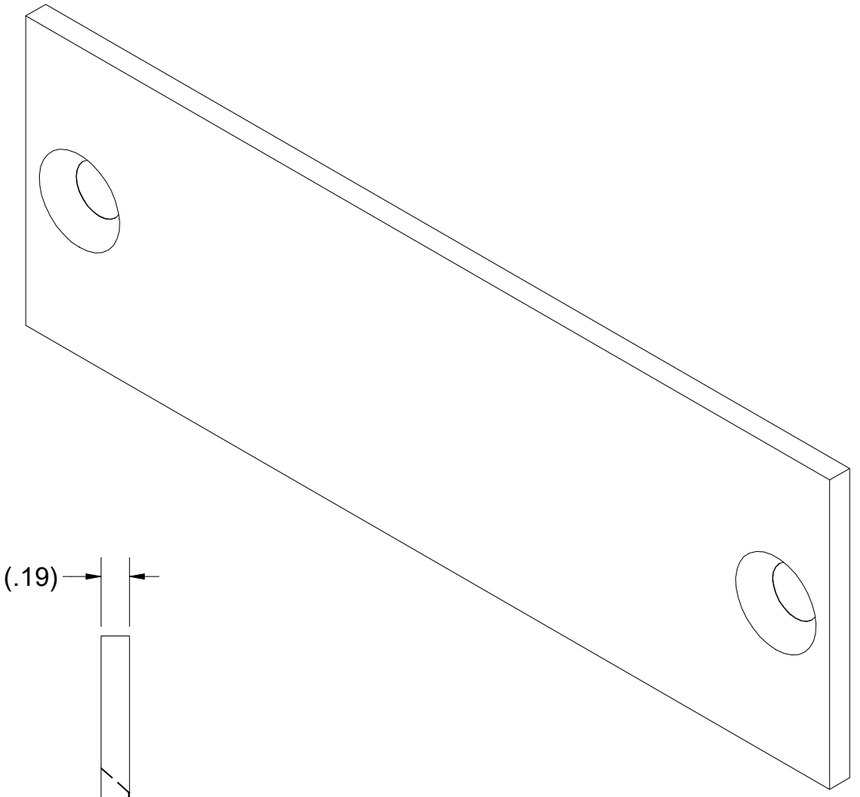

100012941.idw

MATERIAL FINISH: RAW	JENSEN METALTECH 450 E. GLENDALE AVE. SPARKS. NV 89431 775-352-2716 FAX: 755-358-8127 *JENSENMETALTECH.COM*	©2018 Jensen Precast- All rights reserved. All materials appearing as Jensen Precast documents and the like are proprietary work product and are protected under U.S. copyright and other laws. Unless in conjunction with business conducted with Jensen Precast, any use of Jensen Precast work product without express, written consent is prohibited, and recipient is prohibited from distributing any and all work product to non-approved third parties under penalty of civil action.	PART NUMBER & DESCRIPTION: 100012941 NAME PLATE STAINLESS STEEL - FONTANA PORT STYLE CUSTOM	REV: A
MATERIAL SURFACE: SMOOTH			WEIGHT: 0.123 lbmass CREATED: 10/9/2018	DRAWN BY: A. Billett MODIFIED: 3/28/2019	SHEET: 1 OF 1