BILL OF MATERIALS

ITEM	UNIT QTY	QTY	PART NUMBER	DESCRIPTION
1	12.561 ft^3	12.561 ft^3	100006028	CONCRETE 5500 PSI #17 SCC LADWP
2	1	1	100020728	FRAME 4860 FOR 45 VCN COVER LADWP
3	1	1	100006934	CI RING 30DIA NF R-1581 ASTM A-48 CL35B 2-FLANGE DOWN
4	1	4	100002777	INSERT FERRULE LOOP 1/2 X 2-3/4 SS FX-5
5	1	4	100021083	DOWEL SMOOTH L-SHAPED .5DIA X 3.5IN X 12IN
6	1	8	100007007	HEX NUT 1/2-13 UNC HEAVY GALV
7	1	8	100002657	WASHER FLAT 1/2 REGULAR TYPE A PLAIN
8	1	2	100002767	Insert Ferrule Loop 0.75 x 3.5" Zinc (F42 or Equiv.)
9	1	1	300127428	REINFORCING MAT 300127428

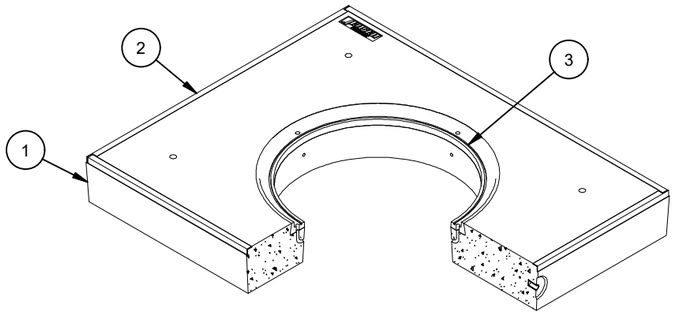

ISO VIEW

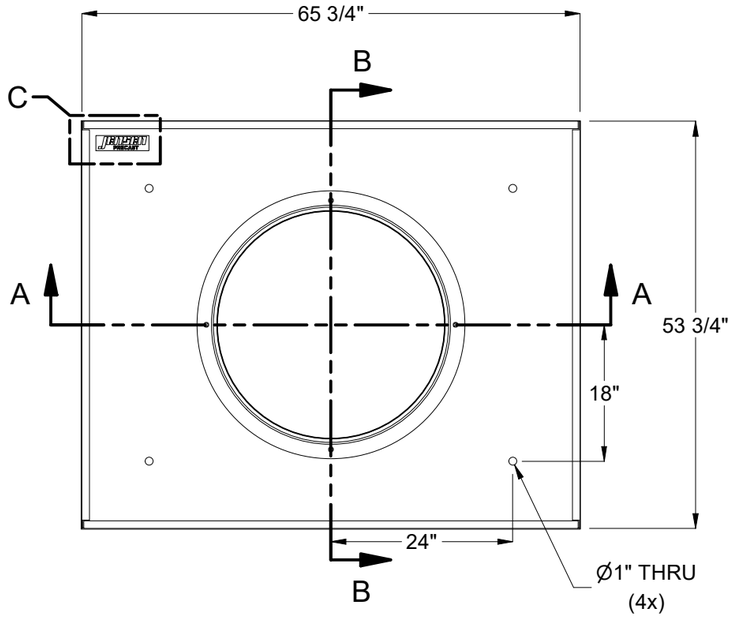

PLAN VIEW

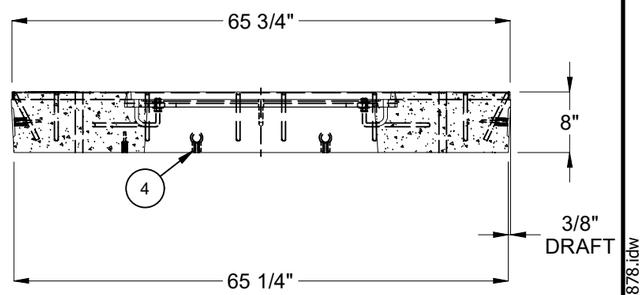

SECTION A-A

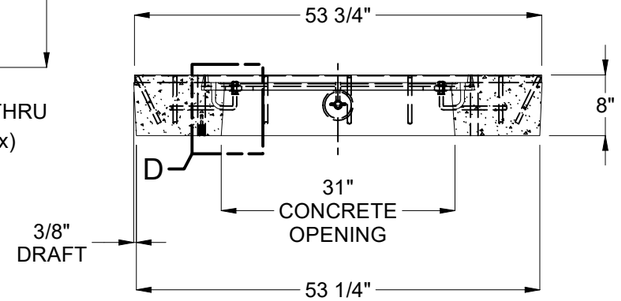

SECTION B-B

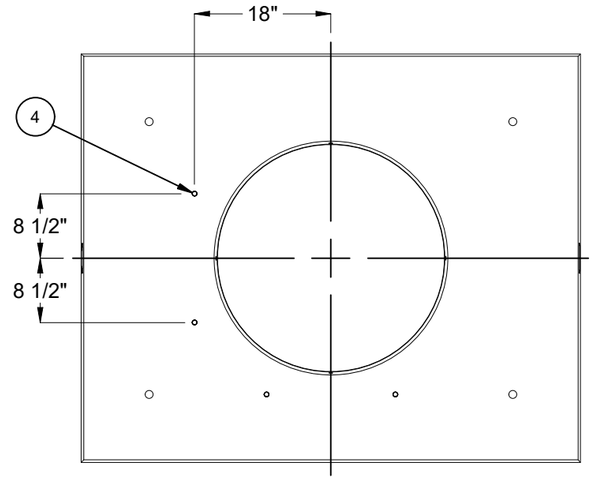

BOTTOM VIEW

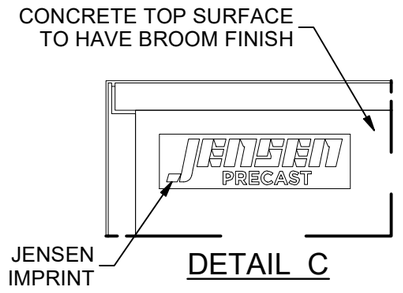

DETAIL C

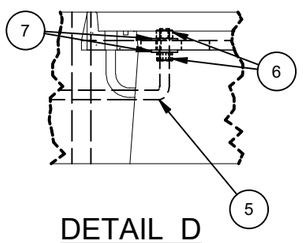

DETAIL D

NOTES:

- STANDARDS. AASHTO LRFD BRIDGE DESIGN SPECIFICATIONS, 8TH EDITION, WITH 2022 CALTRANS AMENDMENTS, CITY OF LOS ANGELES BUREAU OF ENGINEERING STANDARD PLAN S-601-3, P178-R8 WHERE APPLICABLE, MANUAL PART H, ASTM C-857. STRUCTURAL CALCS. #33400.
- MATERIAL. CONCRETE, F'c=5,500 PSI. MIX TO INCLUDE FLY ASH AND DCI. REINFORCEMENT PER ASTM A-706, Fy=60,000.
- LOADS. VERTICAL LIVE LOAD: AASHTO HL-93, INCLUDING GREATER OF HS-20 TRUCK, TANDEM, OR PERMIT. LIVE LOAD SURCHARGE PER LA BOE PART H, FIGURE H 374.2A. SOIL LATERAL LOADS: 40 PCF (DRY), 81 PCF (SATURATED). SEE VAULT OR MANHOLE DRAWING FOR SOIL BEARING CAPACITY INFORMATION. DESIGN SOIL DENSITY IS 120 PCF.
- LOADS NOT INCLUDED. DESIGN DOES NOT INCLUDE COOPER E-80 RAILROAD LOADS OR LATERAL OR SURCHARGE LOADS THAT ARE PRODUCED BY FOOTING OR FOUNDATIONS ADJACENT TO THE STRUCTURE. THIS SUBSTRUCTURE SHALL BE KEPT AT LEAST IN A 1:1 RATIO AWAY FROM ALL FOOTINGS AND FOUNDATIONS, UNLESS THE ENGINEER OF RECORD APPROVES IN WRITING.
- EACH CONCRETE SECTION SHALL BE MARKED ON THE INSIDE & OUTSIDE WITH "JENSEN PRECAST", THE DESIGNATION "DWP/FA-CN" AND THE DATE OF THE POUR.
- "JENSEN", THE YEAR, AND THE DESIGNATION "FA-CN" SHALL BE CAST IN THE TOP OF THE NECK, THE SIDE OF THE COVER, AND ON THE INSIDE OF THE EXTENSIONS.
- EACH PIECE TO BE STENCILIED WITH ITS PART NO.
- BROOM FINISH ON COVER MUST HAVE AND MAINTAIN A MINIMUM OF 0.6 SLIP RESISTANCE AND/OR 0.35 SKID RESISTANCE PER S-601-3.
- ADDITIONAL SUBMITTAL, PERMIT AND CONSTRUCTION PLAN REVIEW WILL BE REQUIRED FOR EACH PROJECT LOCATION. SUBMIT TO CITY ENGINEER FOR APPROVAL PRIOR TO START OF ANY CONSTRUCTION.
- ALL INSTALLATIONS SHALL COMPLY WITH ALL OTHER LOCAL GOVERING CODES AND REGULATIONS INCLUDING CALIFORNIA PUBLIC UTILITIES COMMISSION REGULATIONS.

REVISION HISTORY

REV	DESCRIPTION	DATE	APPROVED
B	INITIAL RELEASE INVENTOR	10/19/2023	

BURY DEPTH:	0.0' - 0.0' to Top		
WATER LEVEL:	3.0'	APPROX. WEIGHT:	2005.06 Lbs
DESIGN SPEC:	AASHTO LRFD,ACI 318,ASTM C857	LOADING SPEC:	AASHTO HL-93
REINFORCEMENT TYPE:	Rebar	LIFTING TYPE:	Insert

JENSEN PRECAST EST. 1968

WWW.JENSENPRECAST.COM

©2023 Jensen Precast- All rights reserved.
All materials appearing as Jensen Precast documents and the like are proprietary work product and are protected under U.S. copyright and other laws.
Unless in conjunction with business conducted with Jensen Precast, any use of Jensen Precast work product without express, written consent is prohibited, and recipient is prohibited from distributing any and all work product to non-approved third parties under penalty of civil action.

DESCRIPTION:	Plug Cover 4860x8 Slab Top 30"C LADWP 1-802 G-2B R-1581 CASTING LAYOUT		REV: B-1
PART NUMBER:	100012878	DRAWN BY:	J. Prado
CREATED:	5/5/2021	MODIFIED:	10/19/2023
			SHEET: 1 OF 1

100012878.idw