DESIGN NOTES
■ DESIGNED PER CALCS. #33540.
■ ALL PARTS TO BE STENCILED: MFG DATE / PRODUCT ID / WEIGHT.
■ "GRD" STENCILED IN RED LETTERS (1 1/2" MIN. - 2" MAX.)

BILL OF MATERIALS

ITEM	UNIT QTY	QTY	PART NUMBER	DESCRIPTION
1	51.964 ft^3	51.964 ft^3	100006029	CONCRETE 5500 PSI SCC ED
2	1	4	100002870	ANCHOR DOGBONE P52 2T X 6-3/4" GALV
3	1	4	100002867	ANCHOR DOGBONE P52 2T X 3-3/8" GALV
4	1	8	100005936	TERMINATOR DUCT WITH SEAL 5IN T5001
5	1	2	100005715	PIPE SCH 40 1IN PVC W/CAP 6"L
6	1	2	100003026	PULL IRON OFFSET .875DIA 6 IH X 10.875L X 6.75W GALV
7	1	16	100012720	INSERT PLASTIC W/ BREAK OFF SNAP 0.5IN
8	1	4	100005932	INSERT GROUND BRONZE BOTTLE ROCKET 1/2-13 UNC WITH 11IN COPPER ROD 12H69
9	1	1	100018218	REINFORCING MAT 100018218

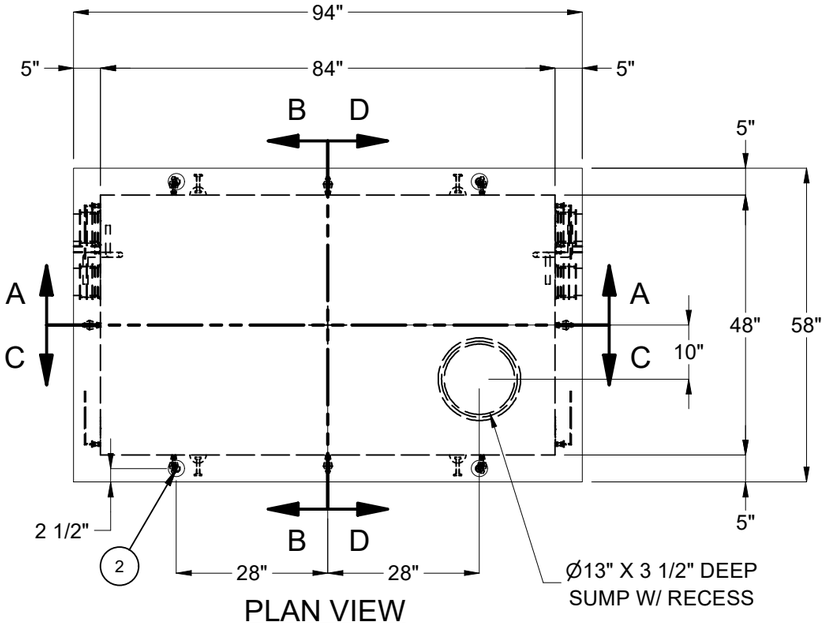

PLAN VIEW

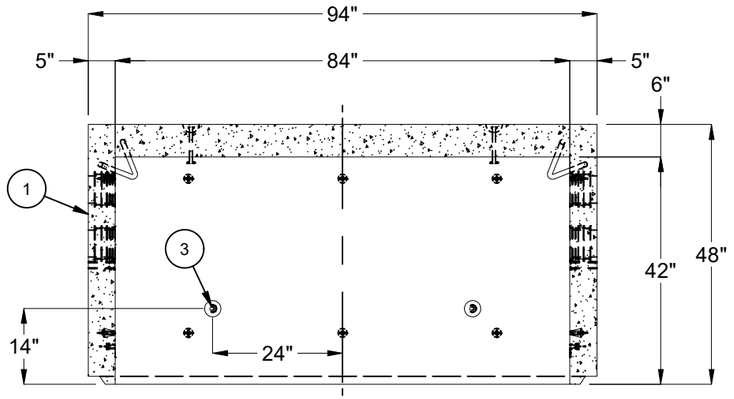

SECTION A-A

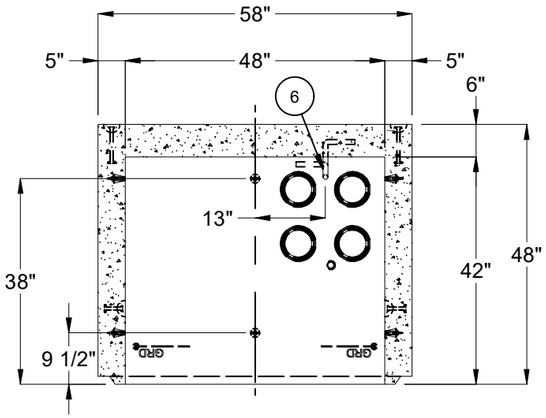

SECTION B-B

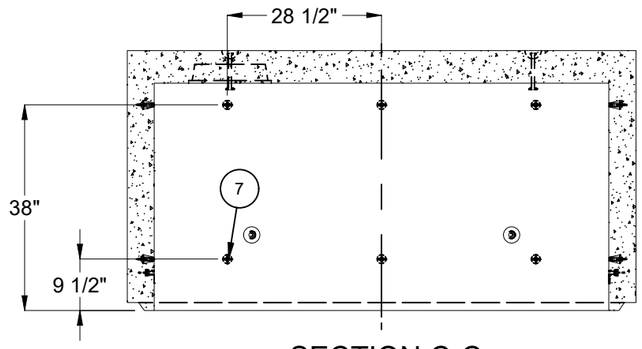

SECTION C-C

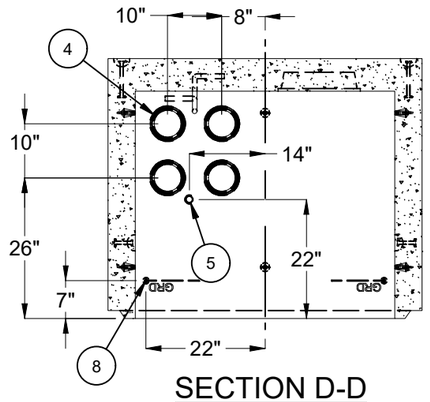

SECTION D-D

LIFTING NOTES
■ INSTALLATION: THIS CONCRETE PRODUCT IS DESIGNED TO BE LIFTED AT 5500 PSI WITH 4 LIFT CONNECTIONS EQUALLY LOADED TO 4 LIFTING POINTS AT A MINIMUM 60° SLING ANGLE, MEASURED FROM HORIZONTAL.
■ DEMOLDING: THIS CONCRETE PRODUCT IS DESIGNED TO BE LIFTED AT 2500 PSI WITH 4 LIFT CONNECTIONS EQUALLY LOADED TO 4 LIFTING POINTS AT A MINIMUM 60° SLING ANGLE, MEASURED FROM HORIZONTAL.
*All rigging shall be design by a qualified professional. Loading diagrams show illustrations of possible rigging setups to achieve the required sling angle and load leg equalization. Other valid rigging configurations are possible. A qualified professional must be consulted prior to lifting.

RIGGING DIAGRAMS*			
INSTALLATION	C	DEMOLDING	C

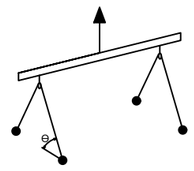

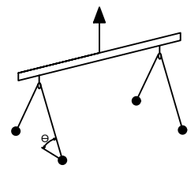

BURY DEPTH:	2.0' - 2.0' to Top		
WATER LEVEL:	3.0'	APPROX. WEIGHT:	7846.48 Lbs
DESIGN SPEC:	ACI 318,ASTM C857	LOADING SPEC:	A-16 (AASHTO HS20-44)
REINFORCEMENT TYPE:	Rebar	LIFTING TYPE:	Dogbone

Infrastructure
JENSEN
WWW.JENSENINFRASTRUCTURE.COM

©2026 Jensen Infrastructure - All rights reserved.
All materials appearing as Jensen Infrastructure documents and the like are proprietary work product and are protected under U.S. copyright and other laws.
Unless in conjunction with business conducted with Jensen Infrastructure , any use of Jensen Infrastructure work product without express, written consent is prohibited, and recipient is prohibited from distributing any and all work product to non-approved third parties under penalty of civil action.
This product shall only be produced in a Jensen Infrastructure facility.

REVISION HISTORY

REV	DESCRIPTION	DATE	APPROVED
D-1	REVISED DESCRIPTION & UPDATED DRAWING	2/11/2026	

DESCRIPTION:	Vault 4884x42 Rect. Bottom Section Terminators Sump Edison SS 537, SB-6 CASTING LAYOUT		REV: D-1-1
PART NUMBER:	100012782	DRAWN BY:	J. Prado
CREATED:	5/12/2020	MODIFIED:	2/11/2026
			SHEET: 1 OF 2

100012782.idw

REINFORCING REVIEW NOTES
■ THE MINIMUM COVER OVER REINFORCING STEEL SHALL BE AS FOLLOWS:
(A) 1 1/2" FOR INSIDE & OUTSIDE FACE OF WALLS.
(B) 1 1/2" FOR INSIDE & OUTSIDE FACE OF ROOF SLABS.
(C) 3/4" FOR SHEAR KEYS.
(D) UNLESS OTHERWISE SHOWN.
TOLERANCES:
1. DIMENSIONS AFFECTING COVERAGE ...± 1/4"-0"
2. DIMENSIONS IN PLANE OF CAGE AND NOT AFFECTING ABOVE ...± 1".

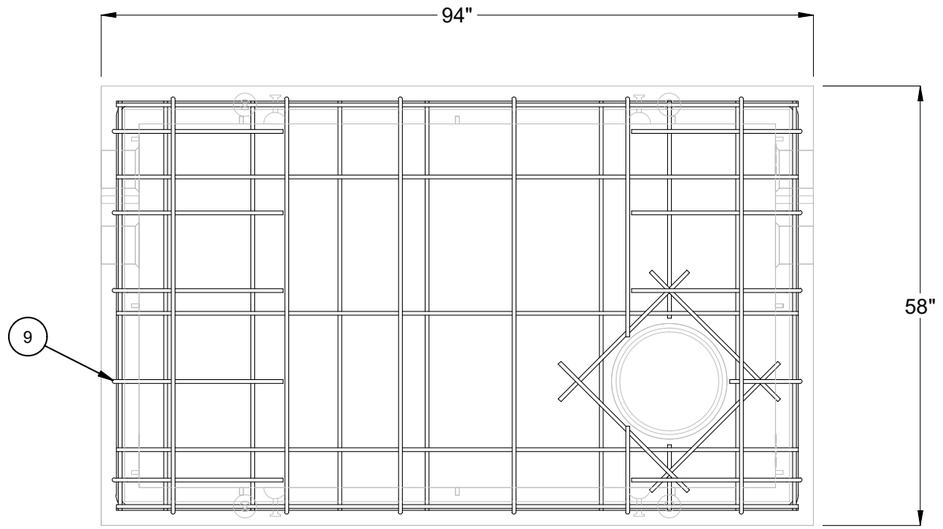

PLAN VIEW

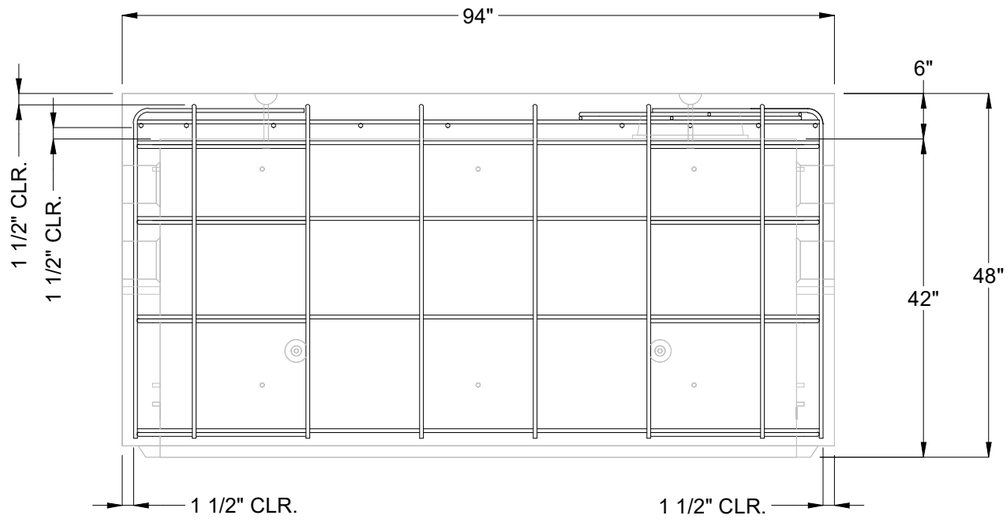

SIDE ELEVATION

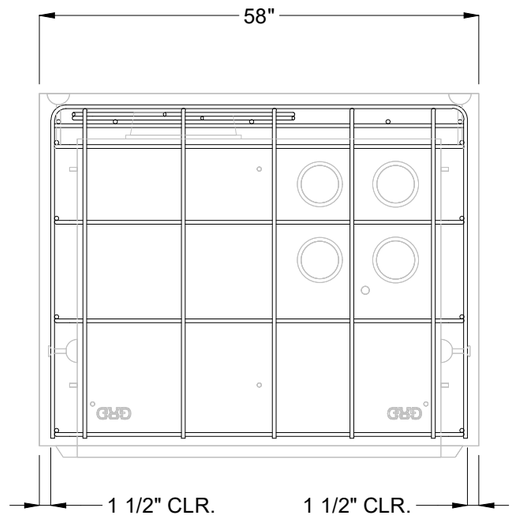

END ELEVATION

BURY DEPTH:	2.0' - 2.0' to Top		
WATER LEVEL:	3.0'	APPROX. WEIGHT:	7846.48 Lbs
DESIGN SPEC:	ACI 318,ASTM C857	LOADING SPEC:	A-16 (AASHTO HS20-44)
REINFORCEMENT TYPE:	Rebar	LIFTING TYPE:	Dogbone

Infrastructure
JENSEN
WWW.JENSENINFRASTRUCTURE.COM

©2026 Jensen Infrastructure - All rights reserved.
All materials appearing as Jensen Infrastructure documents and the like are proprietary work product and are protected under U.S. copyright and other laws.
Unless in conjunction with business conducted with Jensen Infrastructure , any use of Jensen Infrastructure work product without express, written consent is prohibited, and recipient is prohibited from distributing any and all work product to non-approved third parties under penalty of civil action.
This product shall only be produced in a Jensen Infrastructure facility.

DESCRIPTION:	Vault 4884x42 Rect. Bottom Section Terminators Sump Edison SS 537, SB-6 REINFORCEMENT REVIEW		REV: D-1-1
PART NUMBER:	100012782	DRAWN BY:	J. Prado
CREATED:	5/12/2020	MODIFIED:	2/11/2026
			SHEET: 2 OF 2

100012782.idw