DESIGN NOTES
■ ALL PARTS TO BE STENCILED: MFG DATE / JOB NUMBER / PRODUCT ID / WEIGHT.

BILL OF MATERIALS

ITEM	UNIT QTY	QTY	PART NUMBER	DESCRIPTION
1	39.740 ft^3	39.740 ft^3	100024079	CONCRETE #19 MOD SCC
3	1	6	100044597	Insert Thin Slab Coil 4-Leg 1 x 4" Galv (F53 or Equiv.)
4	1	4	100002867	ANCHOR DOGBONE P52 2T X 3-3/8" GALV
5	1	4	100002870	ANCHOR DOGBONE P52 2T X 6-3/4" GALV
2	1	1	100018213	REINFORCING MAT 100018213

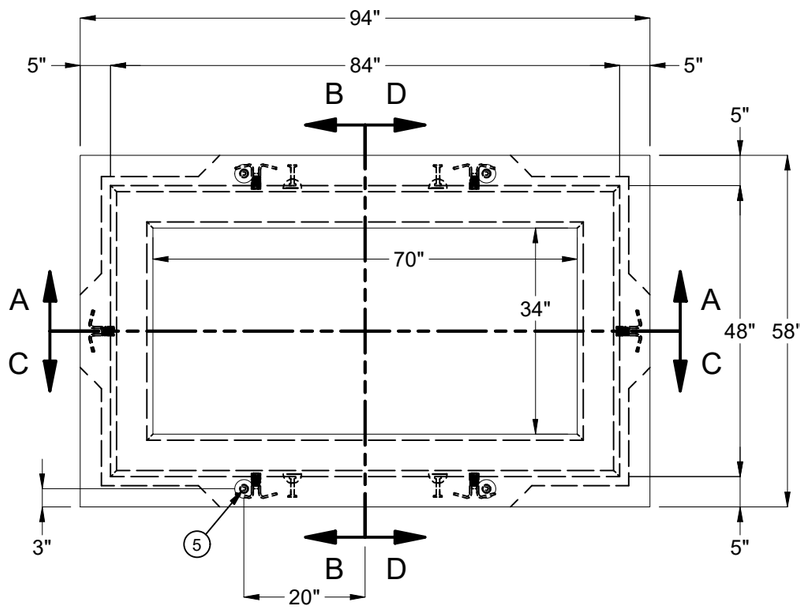

PLAN VIEW

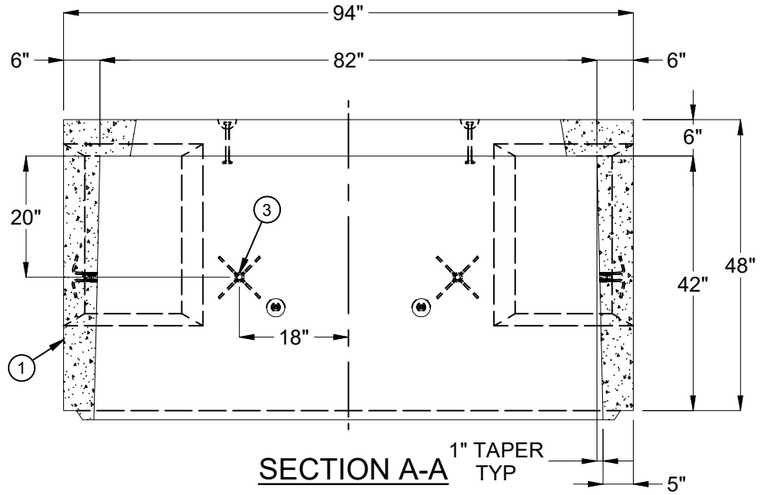

SECTION A-A

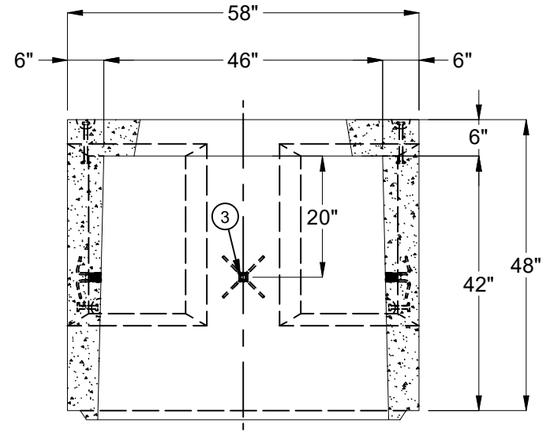

SECTION B-B

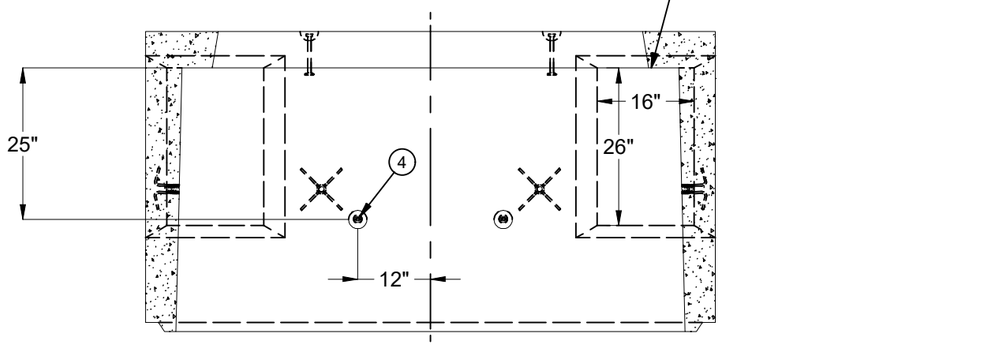

SECTION C-C

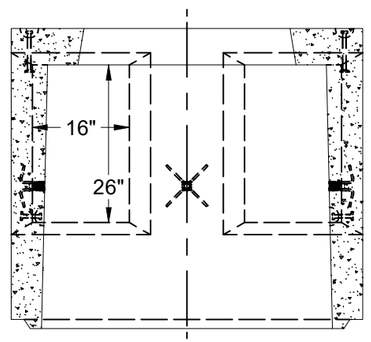

SECTION D-D

LIFTING NOTES
■ DEMOLDING: THIS CONCRETE PRODUCT IS DESIGNED TO BE LIFTED AT 2,500 PSI WITH 4 LIFT CONNECTIONS EQUALLY LOADED TO 4 LIFTING POINTS AT A MINIMUM 90° SLING ANGLE, MEASURED FROM HORIZONTAL.
■ INSTALLATION: THIS CONCRETE PRODUCT IS DESIGNED TO BE LIFTED AT 5,500 PSI WITH 4 LIFT CONNECTIONS EQUALLY LOADED TO 4 LIFTING POINTS AT A MINIMUM 60° SLING ANGLE, MEASURED FROM HORIZONTAL.

BURY DEPTH:	0.4' - 0.4' to Top		
WATER LEVEL:	Below Structure	APPROX. WEIGHT:	5998.64 Lbs
DESIGN SPEC:	ASTM C857,ACI 318	LOADING SPEC:	A-16 (AASHTO HS20-44)
REINFORCEMENT TYPE:	Rebar	LIFTING TYPE:	Dogbone

JENSEN PRECAST EST. 1968

WWW.JENSENPRECAST.COM

©2022 Jensen Precast- All rights reserved.
All materials appearing as Jensen Precast documents and the like are proprietary work product and are protected under U.S. copyright and other laws.
Unless in conjunction with business conducted with Jensen Precast, any use of Jensen Precast work product without express, written consent is prohibited, and recipient is prohibited from distributing any and all work product to non-approved third parties under penalty of civil action.

REVISION HISTORY			
REV	DESCRIPTION	DATE	APPROVED
B-1	INVENTOR DRAWINGS CREATED	11/18/2022	

DESCRIPTION: Vault 4884x42 Rect. Bottom Section Knockout CITY OF GLENDALE CASTING DRAWING			REV: B-1
PART NUMBER:	100012769	DRAWN BY:	M. Zaragoza
CREATED:	11/14/2022	MODIFIED:	11/18/2022
			SHEET: 1 OF 1

100012769.idw