NOTES
■ ALL PARTS TO BE STENCILED: MFG DATE / JOB NUMBER / PRODUCT ID / WEIGHT.

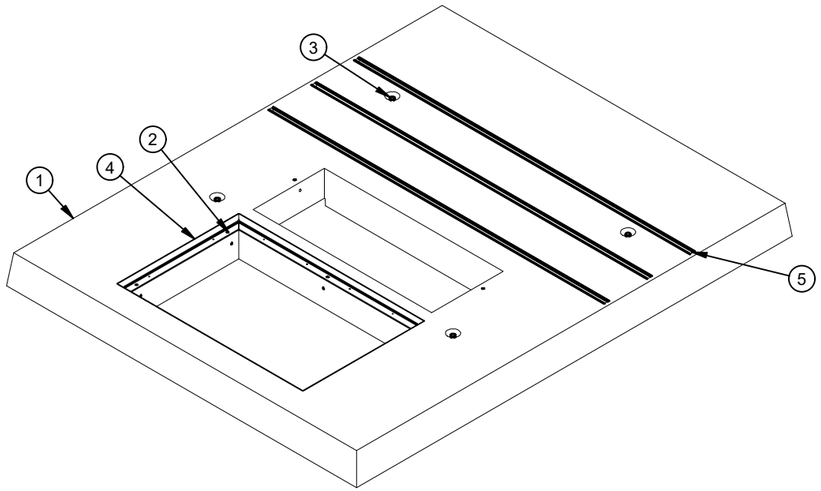

ISOMETRIC VIEW

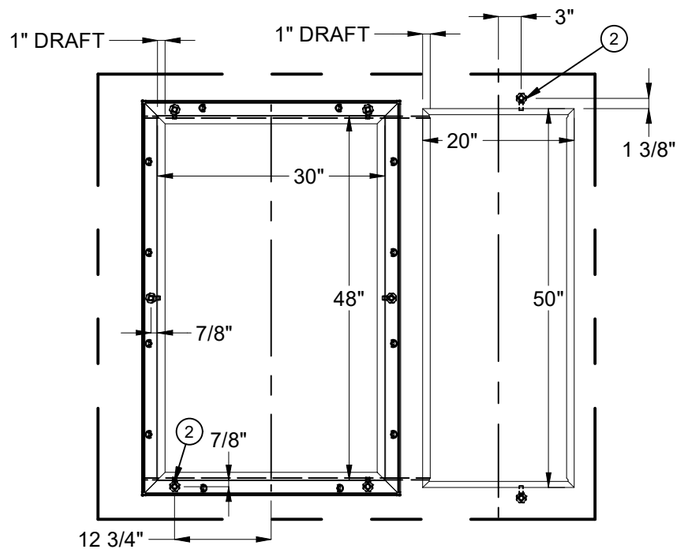

DETAIL C

BILL OF MATERIALS

ITEM	UNIT QTY	QTY	PART NUMBER	DESCRIPTION
1	42.179 ft^3	42.179 ft^3	100024079	CONCRETE #19 MOD SCC
2	1	8	100008114	INSERT THREADED METAL 1/2-13 UNC 1-1/2 IN OPEN
3	1	4	100002867	ANCHOR DOGBONE P52 2T X 3-3/8" GALV
4	1	1	100006689	FAS-3048-CD-G-FONT-OH02-(F3048-PB-ANG)
5	1	3	100006110	STRUT C-CHANNEL CONCRETE INSERT 1-5/8 X 1-5/8 W/ANCHORS N-3200 94IN
6	1	1	300120259	REINFORCING MAT 300120259

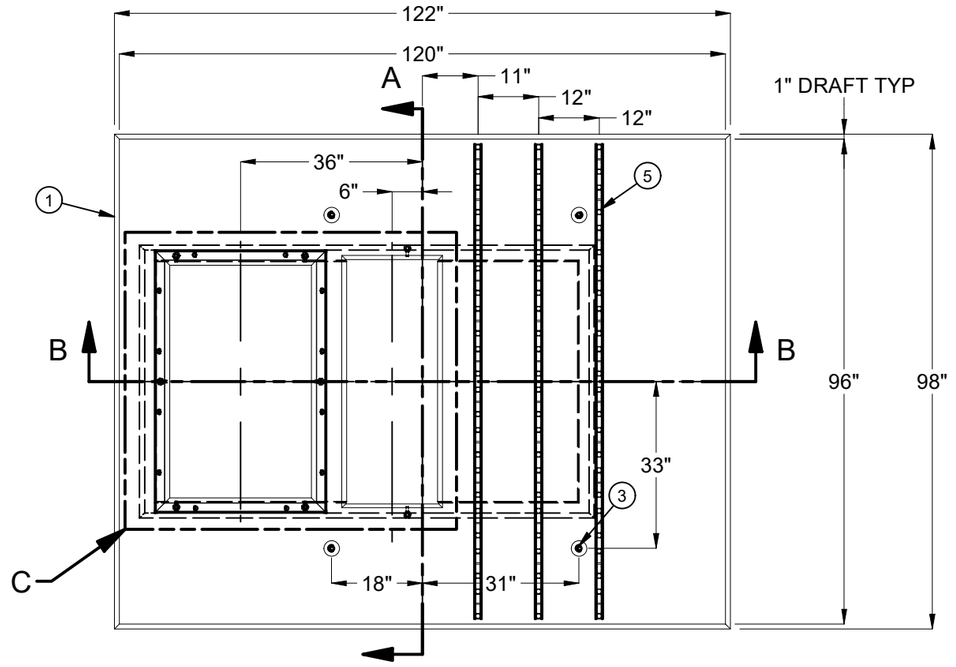

PLAN VIEW

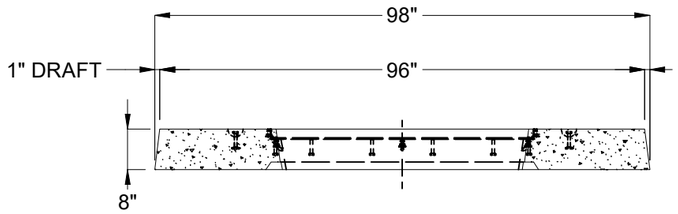

SECTION A-A

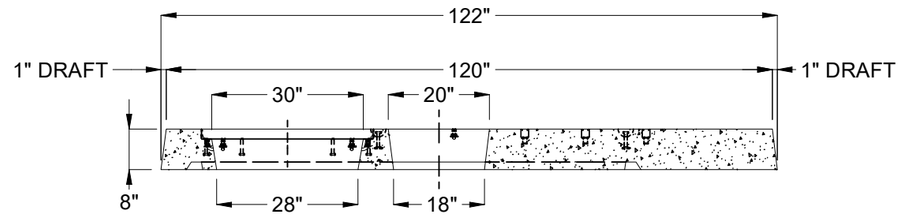

SECTION B-B

LIFTING NOTES
■ DEMOLDING: THIS CONCRETE PRODUCT IS DESIGNED TO BE LIFTED AT 2,500 PSI WITH 4 LIFT CONNECTIONS EQUALLY LOADED TO 4 LIFTING POINTS AT A MINIMUM 90° SLING ANGLE, MEASURED FROM HORIZONTAL.
■ INSTALLATION: THIS CONCRETE PRODUCT IS DESIGNED TO BE LIFTED AT 5,500 PSI WITH 4 LIFT CONNECTIONS EQUALLY LOADED TO 4 LIFTING POINTS AT A MINIMUM 90° SLING ANGLE, MEASURED FROM HORIZONTAL.

BURY DEPTH:	-0.3' - 0.3' to Top		
WATER LEVEL:	3.0'	APPROX. WEIGHT:	6436.87 Lbs
DESIGN SPEC:	ACI 318,ASTM C857	LOADING SPEC:	A-03 (300 psf)
REINFORCEMENT TYPE:	Rebar	LIFTING TYPE:	Dogbone

JENSEN PRECAST EST. 1968

WWW.JENSENPRECAST.COM

©2023 Jensen Precast- All rights reserved.
All materials appearing as Jensen Precast documents and the like are proprietary work product and are protected under U.S. copyright and other laws.
Unless in conjunction with business conducted with Jensen Precast, any use of Jensen Precast work product without express, written consent is prohibited, and recipient is prohibited from distributing any and all work product to non-approved third parties under penalty of civil action.

REVISION HISTORY			
REV	DESCRIPTION	DATE	APPROVED
C-1	REVISED STRUT TO EACH QTY.	8/15/2023	

DESCRIPTION: Pad 96120x8 30"x48"E Glendale CA S-1403-01 CASTING DRAWING			REV: C-1
PART NUMBER:	100012733	DRAWN BY:	M. Zaragoza
CREATED:	11/15/2022	MODIFIED:	8/15/2023
			SHEET: 1 OF 1

100012733.idw