DESIGN NOTES
■ DESIGNED IN ACCORDANCE WITH AASHTO HS20-44 TRAFFIC BRIDGE LOADING USING 5,500 PSI COMPRESSIVE STRENGTH CONCRETE AND 60,000 PSI YIELD STRENGTH ASTM A-706 STEEL REINFORCEMENT PER CALCS. #30649.
■ ALL PARTS TO BE STENCILED: MFG DATE / JOB NUMBER / PRODUCT ID / WEIGHT.

BILL OF MATERIALS

ITEM	UNIT QTY	QTY	PART NUMBER	DESCRIPTION
1	21.716 ft^3	21.716 ft^3	100024079	CONCRETE #19 SCC
2	1	4	100002870	ANCHOR DOGBONE P52 2T X 6-3/4" GALV
3	1	4	100002867	ANCHOR DOGBONE P52 2T X 3-3/8" GALV
4	1	2	100003026	PULL IRON OFFSET .875DIA 6H X 5W X 10.875L GALV
5	1	8	100012720	INSERT PLASTIC W/ BREAK OFF SNAP 0.5IN
6	1	1	100018196	REINFORCING MAT 100018196

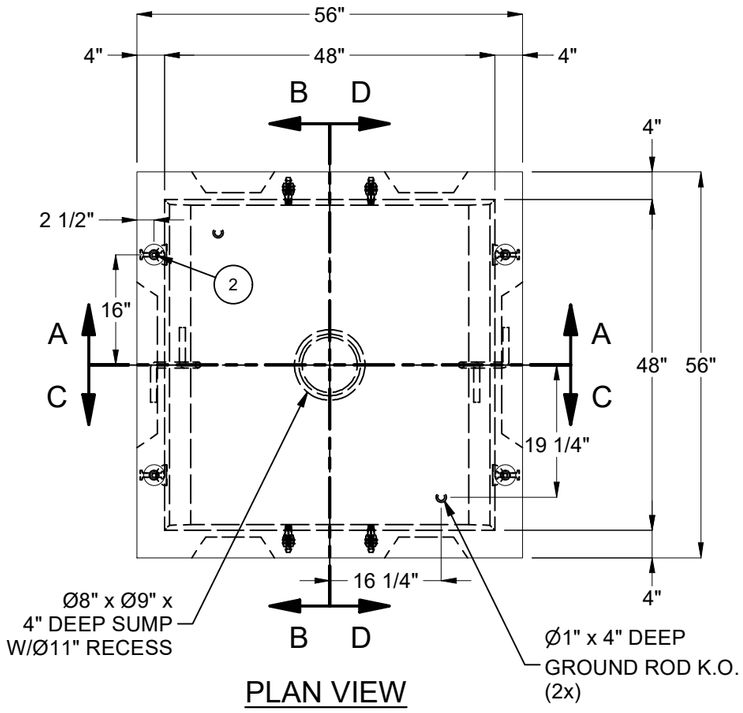

PLAN VIEW

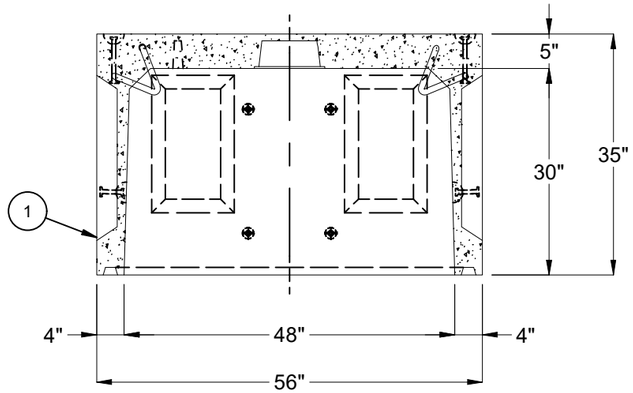

SECTION A-A

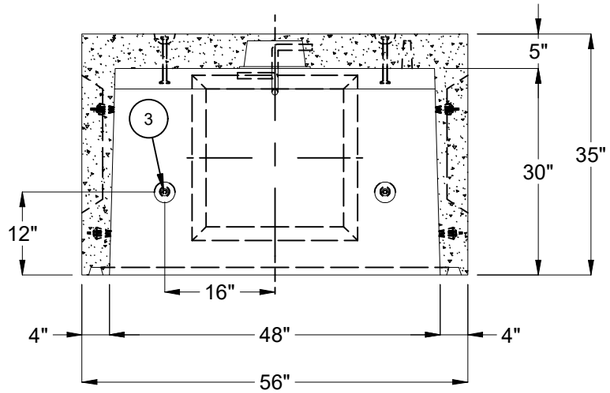

SECTION B-B

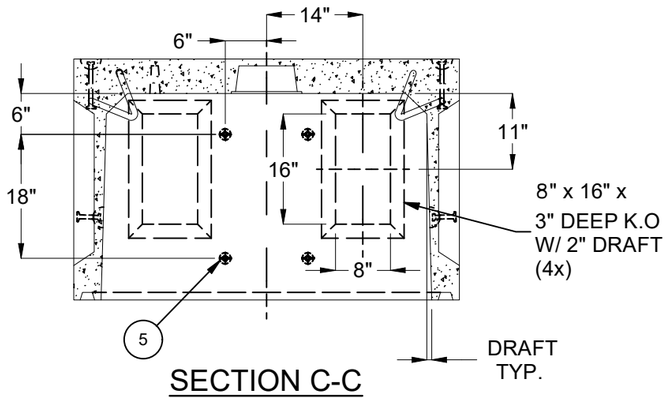

SECTION C-C

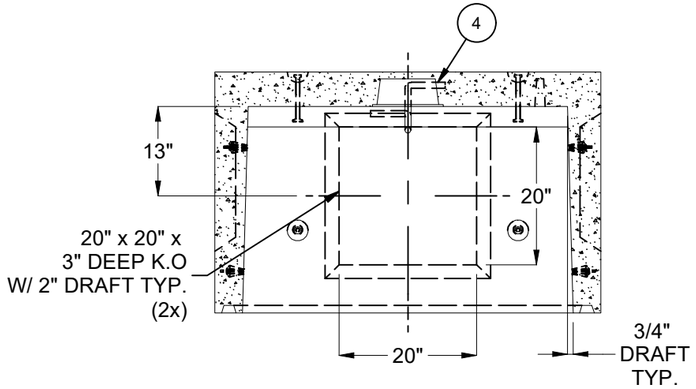

SECTION D-D

LIFTING NOTES
■ INSTALLATION: THIS CONCRETE PRODUCT IS DESIGNED TO BE LIFTED AT 5500 PSI WITH 4 LIFT CONNECTIONS EQUALLY LOADED TO 4 LIFTING POINTS AT A MINIMUM 60° SLING ANGLE, MEASURED FROM HORIZONTAL.
■ DEMOLDING: THIS CONCRETE PRODUCT IS DESIGNED TO BE LIFTED AT 2500 PSI WITH 4 LIFT CONNECTIONS EQUALLY LOADED TO 4 LIFTING POINTS AT A MINIMUM 90° SLING ANGLE, MEASURED FROM HORIZONTAL.
*All rigging shall be design by a qualified professional. Loading diagrams show illustrations of possible rigging setups to achieve the required sling angle and load leg equalization. Other valid rigging configurations are possible. A qualified professional must be consulted prior to lifting.

RIGGING DIAGRAMS*

INSTALLATION	C	DEMOLDING	E

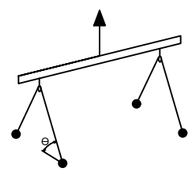

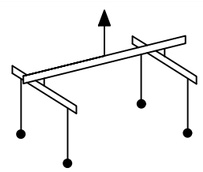

BURY DEPTH:	0.5' - 1.0' to Top		
WATER LEVEL:	3.0'	APPROX. WEIGHT:	3269 Lbs
DESIGN SPEC:	ACI 318,ASTM C857	LOADING SPEC:	A-16 (AASHTO HS20-44)
REINFORCEMENT TYPE:	Rebar	LIFTING TYPE:	Dogbone

JENSEN PRECAST EST. 1968

WWW.JENSENPRECAST.COM

©2024 Jensen Precast- All rights reserved.
All materials appearing as Jensen Precast documents and the like are proprietary work product and are protected under U.S. copyright and other laws.
Unless in conjunction with business conducted with Jensen Precast, any use of Jensen Precast work product without express, written consent is prohibited, and recipient is prohibited from distributing any and all work product to non-approved third parties under penalty of civil action.
This product shall only be produced in a Jensen Precast facility.

REVISION HISTORY

REV	DESCRIPTION	DATE	APPROVED
B-4	REVISED NOTES & ORIENTATION OF PULL IRONS	5/2/2024	

DESCRIPTION:	Vault 4848x30 Rect. Bottom Section Knockout Sump LAUSD CASTING DRAWING		REV: B-4
PART NUMBER:	100012715	DRAWN BY:	J. Prado
CREATED:	10/2/2020	MODIFIED:	5/2/2024
			SHEET: 1 OF 1

100012715.idw