NOTES
■ ALL PARTS TO BE STENCILED: MFG DATE / JOB NUMBER / PRODUCT ID / WEIGHT.

BILL OF MATERIALS

ITEM	UNIT QTY	QTY	PART NUMBER	DESCRIPTION
1	23.997 ft^3	23.997 ft^3	100024079	CONCRETE #19 MOD SCC
2	1	1	100005912	PULL IRON OFFSET .875DIA 3.375 IH X 12.125L X 6.5W GALV
3	1	8	100012720	INSERT PLASTIC W/ BREAK OFF SNAP 0.5IN
4	1	1	100006695	FAS-3636-CD-G-OH03
5	1	2	100008114	INSERT THREADED METAL 1/2-13 UNC 1-1/2 IN OPEN
6	1	4	100002870	ANCHOR DOGBONE P52 2T X 6-3/4" GALV
7	1	4	100002867	ANCHOR DOGBONE P52 2T X 3-3/8" GALV
8	1	1	300154057	REINFORCING MAT 300154057

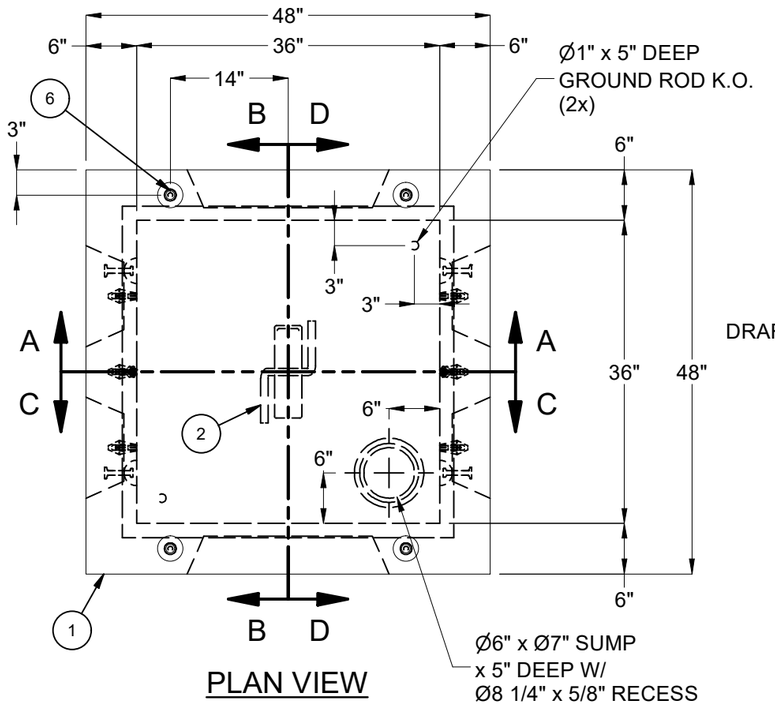

PLAN VIEW

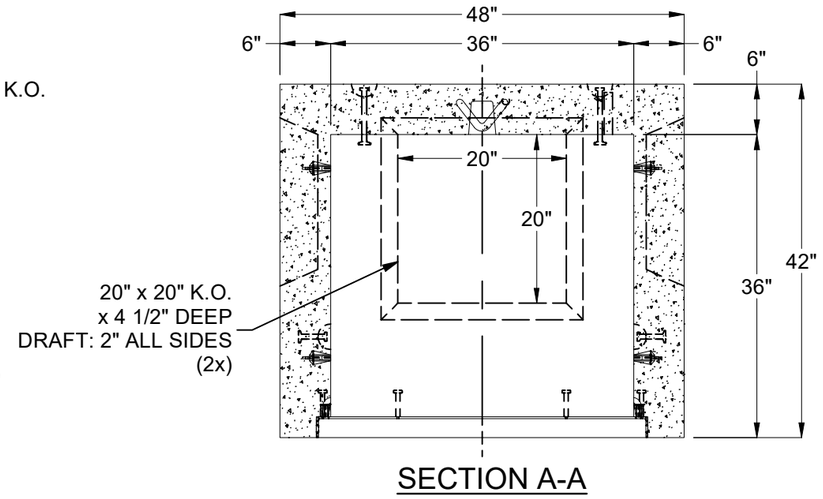

SECTION A-A

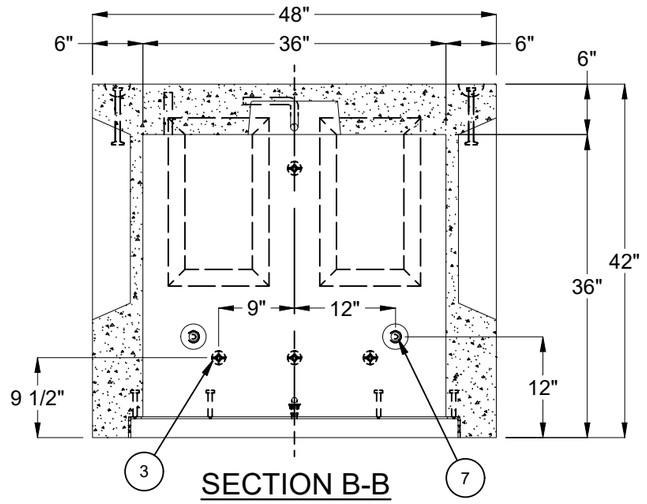

SECTION B-B

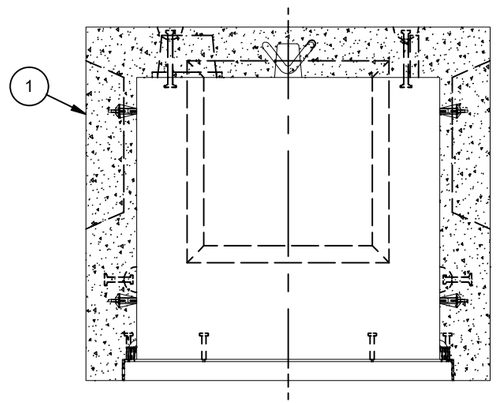

SECTION C-C

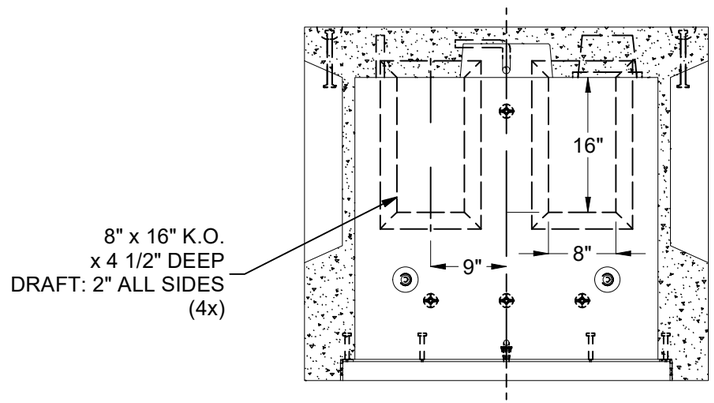

SECTION D-D

LIFTING NOTES
■ DEMOLDING: THIS CONCRETE PRODUCT IS DESIGNED TO BE LIFTED AT 2500 PSI WITH 4 LIFT CONNECTIONS EQUALLY LOADED TO 4 LIFTING POINTS AT A MINIMUM 90° SLING ANGLE, MEASURED FROM HORIZONTAL.
■ INSTALLATION: THIS CONCRETE PRODUCT IS DESIGNED TO BE LIFTED AT 5500 PSI WITH 4 LIFT CONNECTIONS EQUALLY LOADED TO 4 LIFTING POINTS AT A MINIMUM 60° SLING ANGLE, MEASURED FROM HORIZONTAL.

BURY DEPTH:	0.0' - 0.0' to Top		
WATER LEVEL:	3.0'	APPROX. WEIGHT:	3652.86 Lbs
DESIGN SPEC:	ACI 318,ASTM C857	LOADING SPEC:	A-16 (AASHTO HS20-44)
REINFORCEMENT TYPE:	Rebar	LIFTING TYPE:	Dogbone

JENSEN PRECAST EST. 1968

WWW.JENSENPRECAST.COM

©2023 Jensen Precast- All rights reserved.
All materials appearing as Jensen Precast documents and the like are proprietary work product and are protected under U.S. copyright and other laws.
Unless in conjunction with business conducted with Jensen Precast, any use of Jensen Precast work product without express, written consent is prohibited, and recipient is prohibited from distributing any and all work product to non-approved third parties under penalty of civil action.

REVISION HISTORY			
REV	DESCRIPTION	DATE	APPROVED
B-1	INVENTOR RELEASE	10/16/2023	

DESCRIPTION: Vault 3636x36 Rect. Bottom Section Knockout Sump Cast-In Frame LAUSD CASTING LAYOUT			REV: B-2
PART NUMBER:	100012676	DRAWN BY:	R. Ramos
CREATED:	1/4/2023	MODIFIED:	10/16/2023
			SHEET: 1 OF 1

100012676.idw