NOTES
■ ALL PARTS TO BE STENCILED: MFG DATE / JOB NUMBER / PRODUCT ID / WEIGHT.

BILL OF MATERIALS

ITEM	UNIT QTY	QTY	PART NUMBER	DESCRIPTION
1	4.485 ft^3	4.485 ft^3	100005993	CONCRETE 5500 PSI DRYCAST
2	1	4	100002867	ANCHOR DOGBONE P52 2T X 3-3/8" GALV
3	1	1	100008132	RFI PLASTIC TAG IDENCIA
4	1	1	300123708	REINFORCING MAT 300123708
5	1	2	100002765	INSERT FERRULE LOOP 1/2 X 2-3/4 PLATED FX-5
6	1	8	100012720	INSERT PLASTIC W/ BREAK OFF SNAP 0.5IN

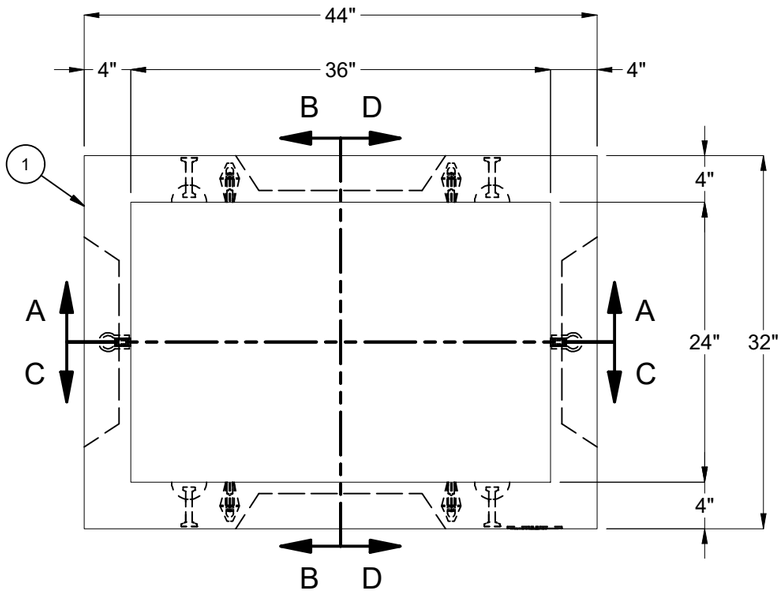

PLAN VIEW

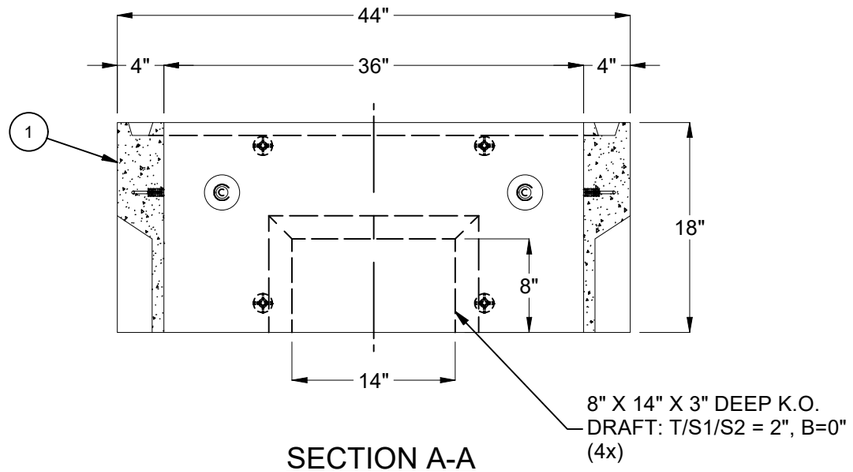

SECTION A-A

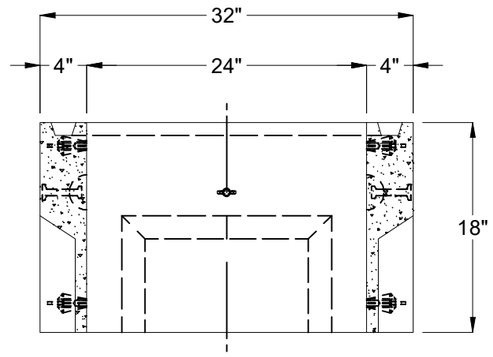

SECTION B-B

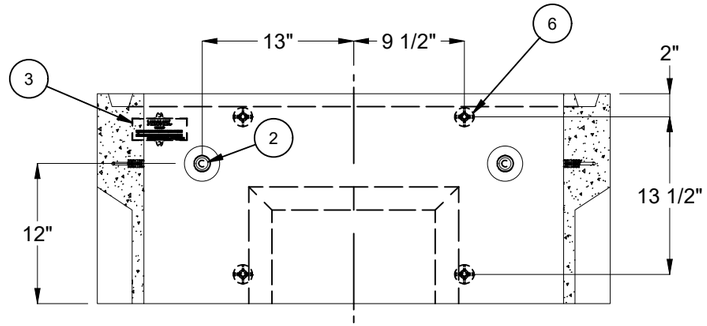

SECTION C-C

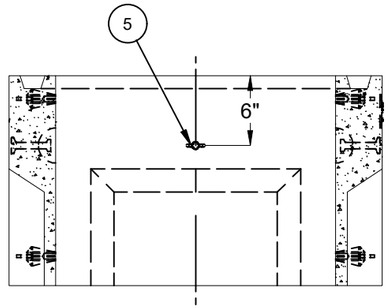

SECTION D-D

LIFTING NOTES
■ DEMOLDING: THIS CONCRETE PRODUCT IS DESIGNED TO BE LIFTED AT 2,500PSI WITH 4 LIFT CONNECTIONS EQUALLY LOADED TO 4 LIFTING POINTS AT A MINIMUM 60° SLING ANGLE, MEASURED FROM HORIZONTAL.
■ INSTALLATION: THIS CONCRETE PRODUCT IS DESIGNED TO BE LIFTED AT 5,500PSI WITH 4 LIFT CONNECTIONS EQUALLY LOADED TO 4 LIFTING POINTS AT A MINIMUM 60° SLING ANGLE, MEASURED FROM HORIZONTAL.

BURY DEPTH:	0.5' - 0.5' to Top		
WATER LEVEL:	3.0'	WEIGHT:	676.19 Lbs
DESIGN SPEC:	ASTM C857,ACI 318	LOADING SPEC:	A-16 (AASHTO HS20-44)
REINFORCEMENT TYPE:	Rebar	LIFTING TYPE:	Dogbone

JENSEN PRECAST EST. 1968

WWW.JENSENPRECAST.COM

©2019 Jensen Precast- All rights reserved.
All materials appearing as Jensen Precast documents and the like are proprietary work product and are protected under U.S. copyright and other laws.
Unless in conjunction with business conducted with Jensen Precast, any use of Jensen Precast work product without express, written consent is prohibited, and recipient is prohibited from distributing any and all work product to non-approved third parties under penalty of civil action.

REVISION HISTORY			
REV	DESCRIPTION	DATE	APPROVED
A-1	INITIAL RELEASE	4/1/2021	

DESCRIPTION: Riser 2436x18 Rect. Riser Thinwall CITY OF AZUSA CASTING LAYOUT			REV: A-1
PART NUMBER:	100012648	DRAWN BY: S. Rodarte	SHEET: 1 OF 1
CREATED:	12/12/2019	MODIFIED:	4/12/2021

100012648.idw