DESIGN NOTES
■ CONCRETE SECTIONS DESIGNED IN ACCORDANCE WITH AASHTO LRFD HL-93 TRAFFIC BRIDGE LOADING AND THE LOS ANGELES CITY BUREAU OF ENGINEERING STANDARD PLAN S-601-3, OR LASTEST EDITION, AND MANUAL PART H USING 5,500 PSI COMPRESSIVE STRENGTH CONCRETE AT 28 DAYS AND 60,000 PSI YEILD STRENGTH REINFORCEMENT PER CALCS. #34127. REINFORCEMENT FOR CONES AND GRADE RINGS SHALL CONFORM TO ASTM A-706 OR A-615. ASTM A-615 REINFORCEMENT MUST BE HAND TIED.
■ SATURATED SOIL CONDITIONS AT 3'-0" BELOW GRADE.
■ DESIGN ASSUMES THAT LATERAL SOIL PRESSURE INCLUDES LIVE LOAD SURCHARGE PER MANUAL PART H.
■ THE DESIGN CALCULATIONS DO NOT INCLUDE ANY LATERAL OR SURCHARGE LOADS THAT ARE PRODUCED BY FOOTINGS OR FOUNDATIONS ADJACENT TO THE STRUCTURE. THIS SUBSTRUCTURE SHALL BE KEPT AT LEAST IN A 1 TO 1 RATIO AWAY FROM ALL FOOTINGS AND FOUNDATIONS, UNLESS THE ENGINEER OF RECORD EXPRESSES THE ACCEPTANCE OF SUCH DESIGN IN WRITING.
■ DESIGN CRITERIA DOES NOT INCLUDE COOPER E-80 RAILROAD LOADS.
■ RING SECTION TO BE STENCILED WITH ITS PART NO.
■ GRADE RING SHALL BE MARKED WITH THE DATE OF THE POUR.
■ THE PROPOSED VAULT SHALL HAVE FABRICATION AND SITE INSPECTIONS BY LA CITY INSPECTOR IN ACCORDANCE WITH SECTION 2-11 & 4-1.3 OF THE LATEST LA BOE "BROWN BOOK".
■ GRADE RING SHALL NOT BE REUSED ONCE REMOVED.

BILL OF MATERIALS

ITEM	UNIT QTY	QTY	PART NUMBER	DESCRIPTION
1	2.616 ft^3	2.616 ft^3	100005993	CONCRETE 5500 PSI DRYCAST MIX
2	1	3	100002867	ANCHOR DOGBONE P52 2T X 3-3/8" GALV
3	1	1	100018157	CAGE GRADE RING D3648 NECK 6W

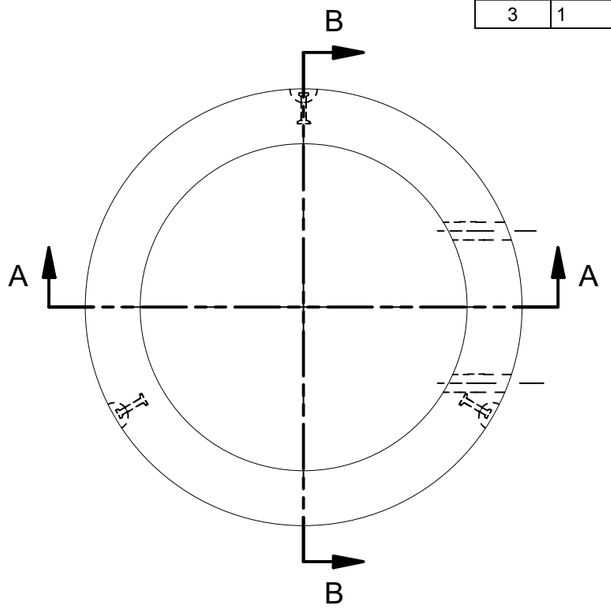

PLAN VIEW

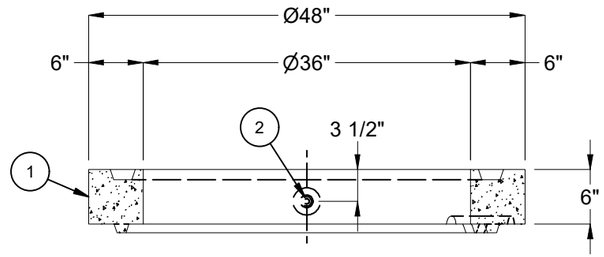

SECTION A-A

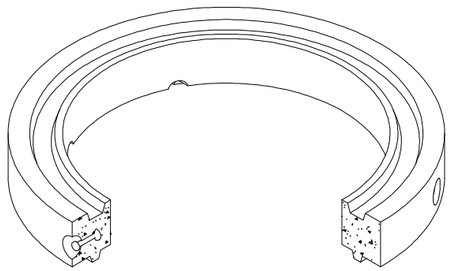

ISO VIEW

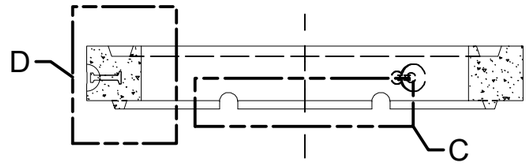

SECTION B-B

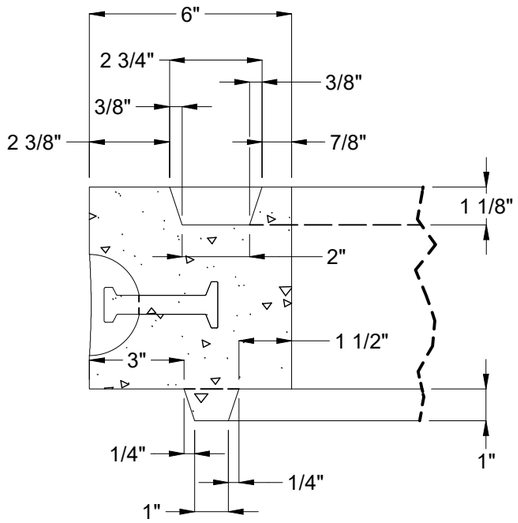

DETAIL D
(JOINT DETAIL)

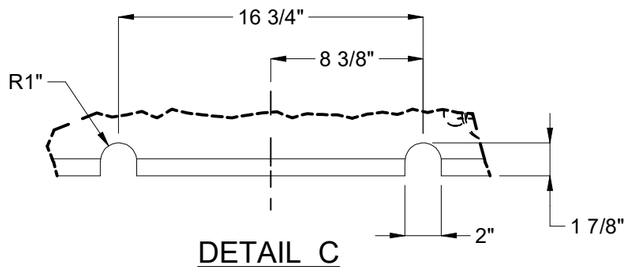

DETAIL C
(NOTCHES FOR KNURLED STEP)

LIFTING NOTES
■ DEMOLDING: THIS CONCRETE PRODUCT IS DESIGNED TO BE LIFTED AT 2500 PSI WITH 3 LIFT CONNECTIONS EQUALLY LOADED TO 3 LIFTING POINTS AT A MINIMUM 90° SLING ANGLE, MEASURED FROM HORIZONTAL.
■ INSTALLATION: THIS CONCRETE PRODUCT IS DESIGNED TO BE LIFTED AT 5500 PSI WITH 3 LIFT CONNECTIONS EQUALLY LOADED TO 3 LIFTING POINTS AT A MINIMUM 90° SLING ANGLE, MEASURED FROM HORIZONTAL.

BURY DEPTH:	0.0' - 3.5' to Top		
WATER LEVEL:	3.0'	APPROX. WEIGHT:	394.34 Lbs
DESIGN SPEC:	AASHTO LRFD	LOADING SPEC:	AASHTO HL-93
REINFORCEMENT TYPE:	Rebar	LIFTING TYPE:	Dogbone

JENSEN PRECAST EST. 1968

WWW.JENSENPRECAST.COM

©2023 Jensen Precast- All rights reserved.
All materials appearing as Jensen Precast documents and the like are proprietary work product and are protected under U.S. copyright and other laws.
Unless in conjunction with business conducted with Jensen Precast, any use of Jensen Precast work product without express, written consent is prohibited, and recipient is prohibited from distributing any and all work product to non-approved third parties under penalty of civil action.

REVISION HISTORY			
REV	DESCRIPTION	DATE	APPROVED
C-1	REVISED KNURLED STEP NOTCHES	4/21/2023	

DESCRIPTION:	Grade Ring D3648x6 CASTING LAYOUT		REV: C-1
PART NUMBER:	100012646	DRAWN BY:	J. Prado
CREATED:	3/26/2021	MODIFIED:	4/21/2023
			SHEET: 1 OF 1

100012646.idw