DESIGN NOTES
■ FOR COMPLETE DESIGN AND PRODUCT INFORMATION CONTACT JENSEN PRECAST.

BILL OF MATERIALS

ITEM	UNIT QTY	QTY	PART NUMBER	DESCRIPTION
1	2.059 ft^3	2.059 ft^3	100005993	CONCRETE 5500 PSI DRYCAST MIX
2	1	4	100002777	INSERT FERRULE LOOP 1/2 X 2-3/4 SS FX-5
3	1	1	100017853	REINFORCING MAT 100017853
4	1	3	100002867	ANCHOR DOGBONE LIFT 2T X 3-3/8 GALV MB DB-52
5	1	1	100008132	RFI PLASTIC TAG IDENCIA

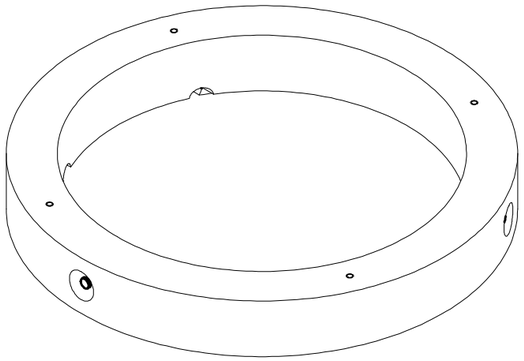

ISO VIEW

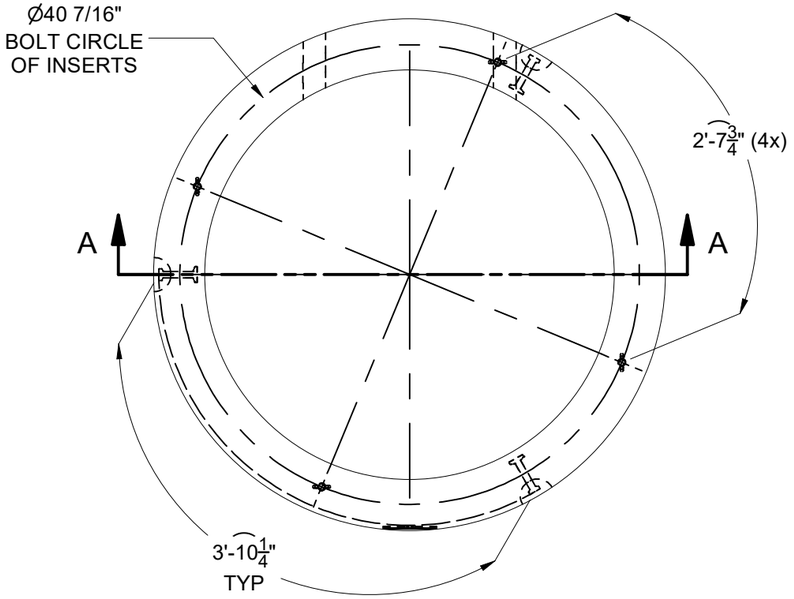

PLAN VIEW

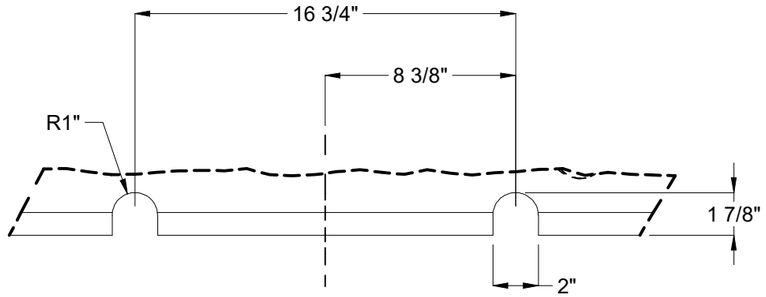

DETAIL B
(NOTCHES FOR KNURLED STEP)

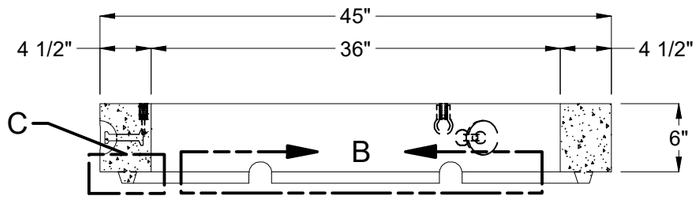

SECTION A-A

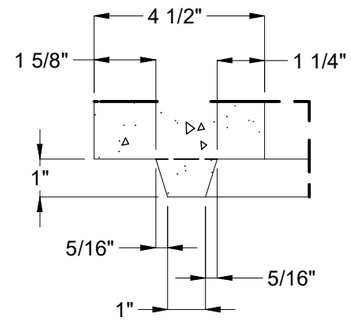

DETAIL C

LIFTING NOTES
■ DEMOLDING: THIS CONCRETE PRODUCT IS DESIGNED TO BE LIFTED AT 2500 PSI WITH 3 LIFT CONNECTIONS EQUALLY LOADED TO 3 LIFTING POINTS AT A MINIMUM 60° SLING ANGLE, MEASURED FROM HORIZONTAL.
■ INSTALLATION: THIS CONCRETE PRODUCT IS DESIGNED TO BE LIFTED AT 5500 PSI WITH 3 LIFT CONNECTIONS EQUALLY LOADED TO 3 LIFTING POINTS AT A MINIMUM 60° SLING ANGLE, MEASURED FROM HORIZONTAL.

REVISION HISTORY			
REV	DESCRIPTION	DATE	APPROVED
B	UPDATE BOM	3/12/2020	

BURY DEPTH:	0.0' - 1.0' to Top of Section		
WATER LEVEL:	3.0'	WEIGHT:	311.14 Lbs
DESIGN SPEC:	ASTM C857	LOADING SPEC:	A-16 (AASHTO HS20-44)
REINFORCEMENT TYPE:	Rebar	LIFTING TYPE:	Dogbone

JENSEN PRECAST EST. 1968

WWW.JENSENPRECAST.COM

©2018 Jensen Precast- All rights reserved.
All materials appearing as Jensen Precast documents and the like are proprietary work product and are protected under U.S. copyright and other laws.
Unless in conjunction with business conducted with Jensen Precast, any use of Jensen Precast work product without express, written consent is prohibited, and recipient is prohibited from distributing any and all work product to non-approved third parties under penalty of civil action.

DESCRIPTION:	Grade Ring D3645x6 Flat with Inserts CASTING LAYOUT		REV: B
PART NUMBER:	100012645	DRAWN BY:	N. Chand
CREATED:	2/27/2019	MODIFIED:	3/12/2020
			SHEET: 1 OF 1

100012645.idw