NOTES
■ ALL PARTS TO BE STENCILED: MFG DATE / JOB NUMBER / PRODUCT ID / WEIGHT.

BILL OF MATERIALS

ITEM	UNIT QTY	QTY	PART NUMBER	DESCRIPTION
1	11.360 ft^3	11.360 ft^3	100024079	CONCRETE #19 MOD SCC
3	1	2	100002767	Insert Ferrule Loop 0.75 x 3.5" Zinc (F42 or Equiv.)
5	1	4	100002872	ANCHOR DOGBONE P52 4T X 3-3/4" GALV
4	*Varies*	20.21 ft	100008799	FIBER EXPANSION JOINT FILLER 3/8X8 ASTM D-1751 EXPANDED FELT
2	1	1	300119972	REINFORCING MAT 300119972

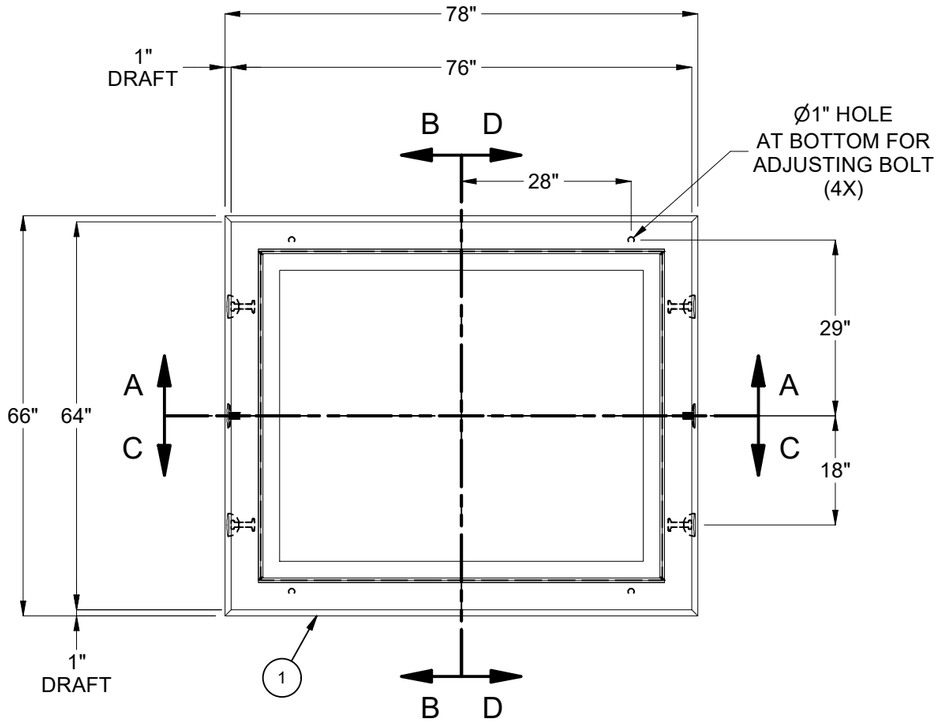

PLAN VIEW

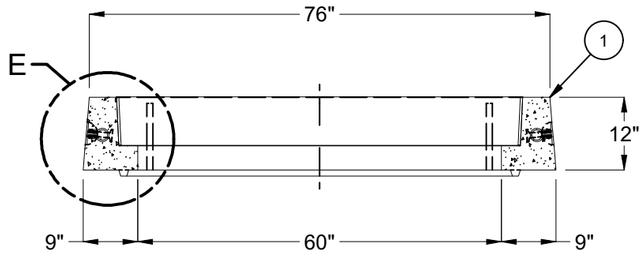

SECTION A-A

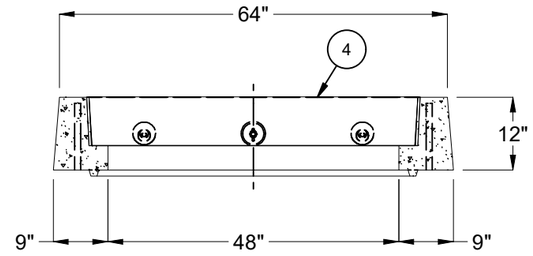

SECTION B-B

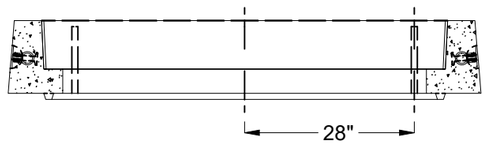

SECTION C-C

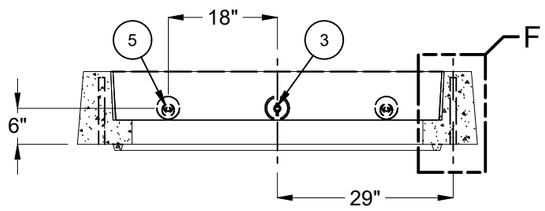

SECTION D-D

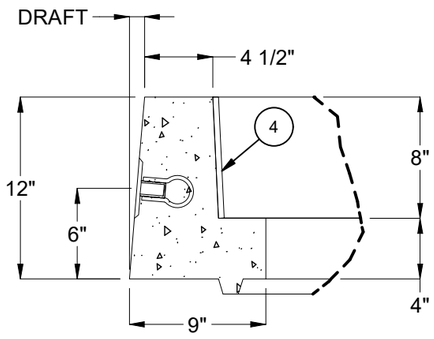

DETAIL E

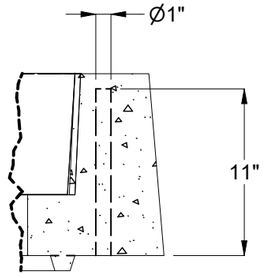

DETAIL F
HOLE FOR
ADJUSTING BOLT

LIFTING NOTES
■ DEMOLDING: THIS CONCRETE PRODUCT IS DESIGNED TO BE LIFTED AT 2500 PSI WITH 2 LIFT CONNECTIONS EQUALLY LOADED TO 2 LIFTING POINTS AT A MINIMUM 90° SLING ANGLE, MEASURED FROM HORIZONTAL.
■ INSTALLATION: THIS CONCRETE PRODUCT IS DESIGNED TO BE LIFTED AT 5500 PSI WITH 4 LIFT CONNECTIONS EQUALLY LOADED TO 4 LIFTING POINTS AT A MINIMUM 90° SLING ANGLE, MEASURED FROM HORIZONTAL.

BURY DEPTH:	0.0' - 0.0' to Top		
WATER LEVEL:	3.0'	APPROX. WEIGHT:	1752.51 Lbs
DESIGN SPEC:	ACI 318,ASTM C857	LOADING SPEC:	A-16 (AASHTO HS20-44)
REINFORCEMENT TYPE:	Rebar	LIFTING TYPE:	Dogbone

JENSEN PRECAST EST. 1968

WWW.JENSENPRECAST.COM

©2023 Jensen Precast- All rights reserved.
All materials appearing as Jensen Precast documents and the like are proprietary work product and are protected under U.S. copyright and other laws.
Unless in conjunction with business conducted with Jensen Precast, any use of Jensen Precast work product without express, written consent is prohibited, and recipient is prohibited from distributing any and all work product to non-approved third parties under penalty of civil action.

REVISION HISTORY			
REV	DESCRIPTION	DATE	APPROVED
C-1	REVISED DESCRIPTION	5/12/2023	

DESCRIPTION:	Vault Neck 4860x12 CASTING LAYOUT		REV: C-1
PART NUMBER:	100012400	DRAWN BY:	J. Prado
CREATED:	6/8/2020	MODIFIED:	5/12/2023
			SHEET: 1 OF 1

100012400.idw