BILL OF MATERIALS

ITEM	UNIT QTY	QTY	PART NUMBER	DESCRIPTION
1	10.096 ft^3	10.096 ft^3	100006028	CONCRETE 5500 PSI #17 SCC LADWP
2	1	4	100002867	ANCHOR DOGBONE P52 2T X 3-3/8" GALV
3	1	2	100002767	Insert Ferrule Loop 0.75 x 3.5" Zinc (F42 or Equiv.)
4	*Varies*	18.21 ft	100008799	FIBER EXPANSION JOINT FILLER 3/8X8 ASTM D-1751 EXPANDED FELT
5	1	1	100018097	REINFORCING MAT 100018097

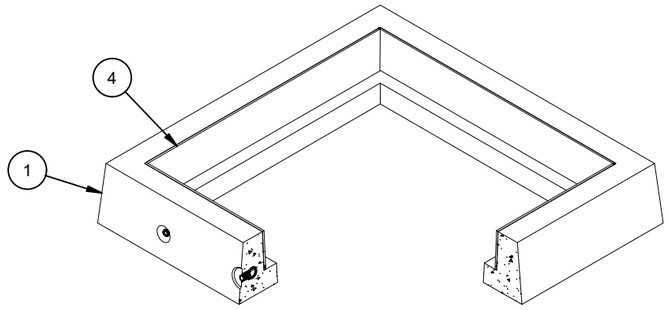

ISO VIEW

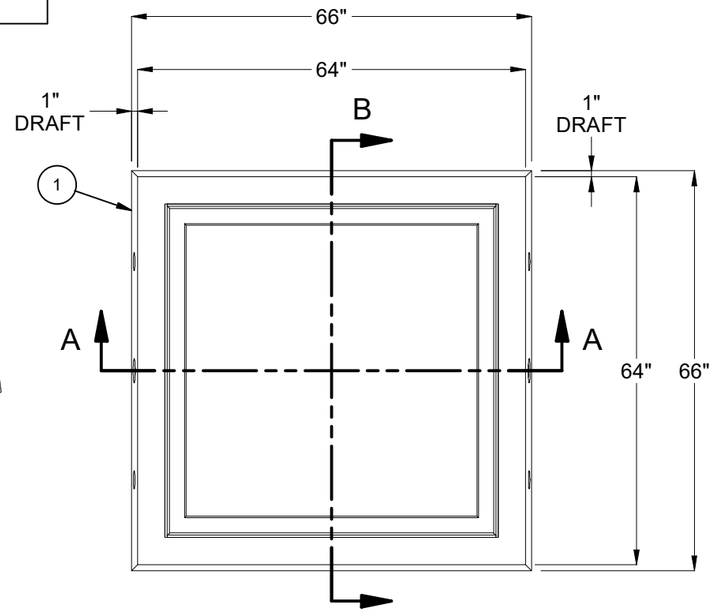

PLAN VIEW

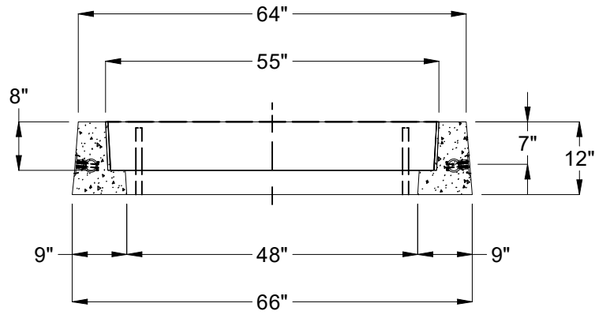

SECTION A-A

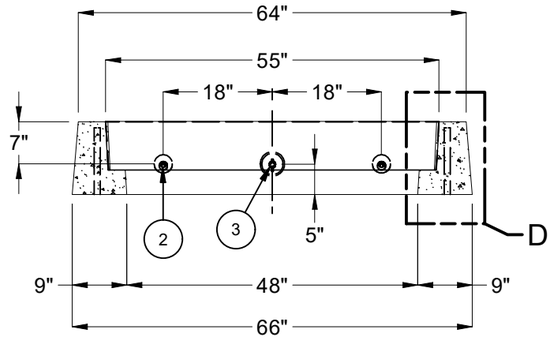

SECTION B-B

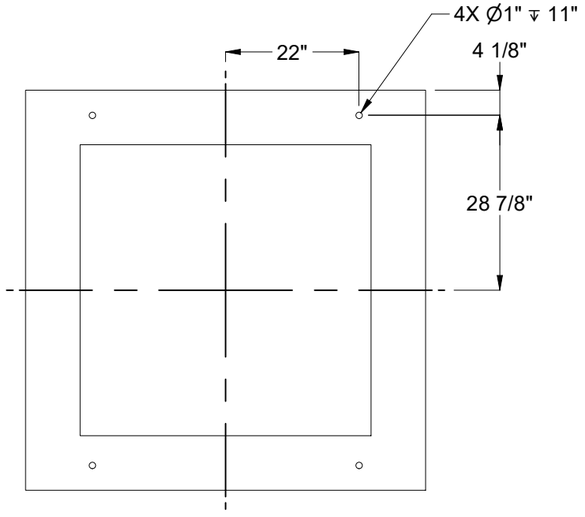

BOTTOM VIEW

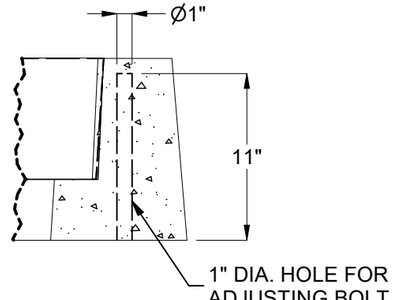

DETAIL D

NOTES:

- STANDARDS. AASHTO LRFD BRIDGE DESIGN SPECIFICATIONS, 8TH EDITION, WITH 2022 CALTRANS AMENDMENTS. CITY OF LOS ANGELES BUREAU OF ENGINEERING STANDARD PLAN S-601-3, P178-R8 WHERE APPLICABLE, MANUAL PART H, ASTM C-857. STRUCTURAL CALCS. #33389.
- MATERIAL. CONCRETE, F'c=5,500 PSI. MIX TO INCLUDE FLY ASH AND DCI. REINFORCEMENT PER ASTM A-706, Fy=60,000.
- LOADS. VERTICAL LIVE LOAD: AASHTO HL-93, INCLUDING GREATER OF HS-20 TRUCK, TANDEM, OR PERMIT. LIVE LOAD SURCHARGE PER LA BOE PART H, FIGURE H 374.2A. SOIL LATERAL LOADS: 40 PCF (DRY), 81 PCF (SATURATED). SEE VAULT OR MANHOLE DRAWING FOR SOIL BEARING CAPACITY INFORMATION. DESIGN SOIL DENSITY IS 120 PCF.
- LOADS NOT INCLUDED. DESIGN DOES NOT INCLUDE COOPER E-80 RAILROAD LOADS OR LATERAL OR SURCHARGE LOADS THAT ARE PRODUCED BY FOOTING OR FOUNDATIONS ADJACENT TO THE STRUCTURE. THIS SUBSTRUCTURE SHALL BE KEPT AT LEAST IN A 1:1 RATIO AWAY FROM ALL FOOTINGS AND FOUNDATIONS, UNLESS THE ENGINEER OF RECORD APPROVES IN WRITING.
- EACH CONCRETE SECTION SHALL BE MARKED ON THE INSIDE & OUTSIDE WITH "JENSEN", THE DESIGNATION "DWP/FA-CN" AND THE DATE OF THE POUR.
- "JENSEN", THE YEAR, AND THE DESIGNATION "FA-CN" SHALL BE CAST IN THE TOP OF THE NECK, THE SIDE OF THE COVER, AND ON THE INSIDE OF THE EXTENSIONS.
- EACH PIECE TO BE STENCILIED WITH ITS PART NO.
- ADDITIONAL SUBMITTAL, PERMIT AND CONSTRUCTION PLAN REVIEW WILL BE REQUIRED FOR EACH PROJECT LOCATION. SUBMIT TO CITY ENGINEER FOR APPROVAL PRIOR TO START OF ANY CONSTRUCTION.
- ALL INSTALLATIONS SHALL COMPLY WITH ALL OTHER LOCAL GOVERING CODES AND REGULATIONS INCLUDING CALIFORNIA PUBLIC UTILITIES COMMISSION REGULATIONS.
- INSTALLATION OF NECK AND EXTENSIONS PER LADWP.

BURY DEPTH:	0.0' - 0.0' to Top		
WATER LEVEL:	3.0'	APPROX. WEIGHT:	1541.17 Lbs
DESIGN SPEC:	AASHTO LRFD	LOADING SPEC:	AASHTO HL-93
REINFORCEMENT TYPE:	Rebar	LIFTING TYPE:	Dogbone

Infrastructure
JENSEN
WWW.JENSENINFRASTRUCTURE.COM

©2026 Jensen Infrastructure - All rights reserved.
All materials appearing as Jensen Infrastructure documents and the like are proprietary work product and are protected under U.S. copyright and other laws.
Unless in conjunction with business conducted with Jensen Infrastructure , any use of Jensen Infrastructure work product without express, written consent is prohibited, and recipient is prohibited from distributing any and all work product to non-approved third parties under penalty of civil action.
This product shall only be produced in a Jensen Infrastructure facility.

REVISION HISTORY

REV	DESCRIPTION	DATE	APPROVED
C-1	UPDATED DESCRIPTION	3/19/2026	

DESCRIPTION:	Vault Neck 4848x12 LADWP CASTING LAYOUT	REV:	C-1
PART NUMBER:	100012389	DRAWN BY:	C.Aguillon
CREATED:	4/2/2018	MODIFIED:	3/19/2026
		SHEET:	1 OF 2

100012389.idw

REINFORCING REVIEW NOTES
■ THE MINIMUM COVER OVER REINFORCING STEEL SHALL BE AS FOLLOWS:
(A) 1 1/2" FOR INSIDE & OUTSIDE FACE OF WALLS.
(B) 1 1/2" FOR INSIDE & OUTSIDE FACE OF ROOF SLABS.
(C) 3/4" FOR SHEAR KEYS.
(D) UNLESS OTHERWISE SHOWN.
TOLERANCES:
1. DIMENSIONS AFFECTING COVERAGE ...± 1/4"-0"
2. DIMENSIONS IN PLANE OF CAGE AND NOT AFFECTING ABOVE ...± 1".

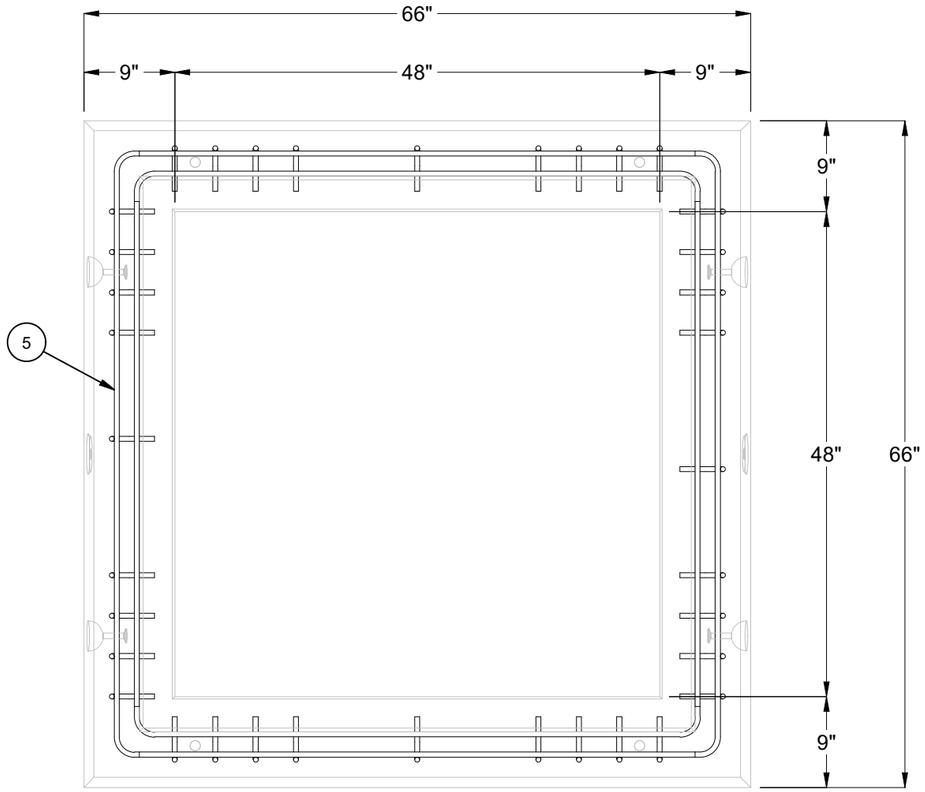

PLAN VIEW

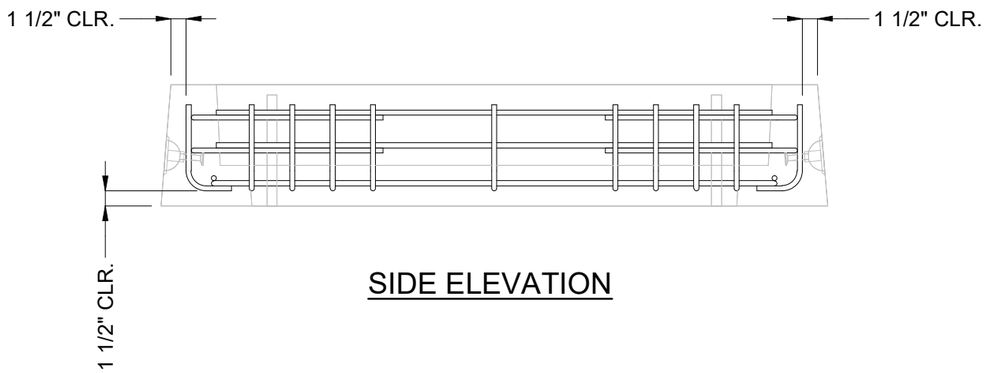

SIDE ELEVATION

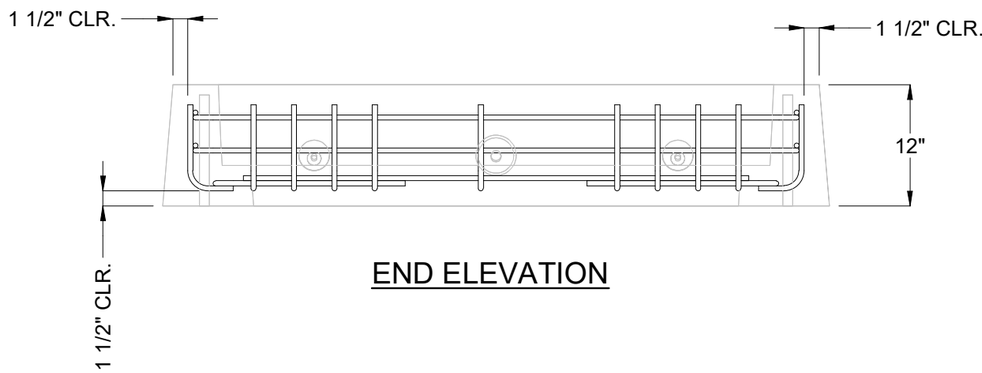

END ELEVATION

BURY DEPTH:	0.0' - 0.0' to Top		
WATER LEVEL:	3.0'	APPROX. WEIGHT:	1541.17 Lbs
DESIGN SPEC:	AASHTO LRFD	LOADING SPEC:	AASHTO HL-93
REINFORCEMENT TYPE:	Rebar	LIFTING TYPE:	Dogbone

Infrastructure
JENSEN
WWW.JENSENINFRASTRUCTURE.COM

©2026 Jensen Infrastructure - All rights reserved.
All materials appearing as Jensen Infrastructure documents and the like are proprietary work product and are protected under U.S. copyright and other laws.
Unless in conjunction with business conducted with Jensen Infrastructure , any use of Jensen Infrastructure work product without express, written consent is prohibited, and recipient is prohibited from distributing any and all work product to non-approved third parties under penalty of civil action.
This product shall only be produced in a Jensen Infrastructure facility.

DESCRIPTION:	Vault Neck 4848x12 LADWP REINFORCEMENT REVIEW		REV: C-1
PART NUMBER:	100012389	DRAWN BY:	C.Aguillon
CREATED:	4/2/2018	MODIFIED:	3/19/2026

SHEET: 2 OF 2

100012389.idw