NOTES
■ CONCRETE MIX USED IN POURING THIS PRODUCT SHALL USE FLY ASH AS AN ADMIXTURE.
■ ALL PARTS TO BE STENCILED: MFG DATE / JOB NUMBER / PRODUCT ID / WEIGHT.

STOCKPILE - JENSEN INFRASTRUCTURE
CITY OF LOS ANGELES INSPECTION
REQUIRED WO# C0034604

BILL OF MATERIALS

ITEM	UNIT QTY	QTY	PART NUMBER	DESCRIPTION
1	305.918 ft^3	305.918 ft^3	100006026	CONCRETE 5500 PSI DCI & FLY ASH LADWP MIX #30
2	1	12	100003010	TERMINATOR DUCT WITH SEAL 2IN T2001
3	12.000 in	144.000 in	100013798	PIPE PVC SCH 40 2IN DIA
4	1	4	100002880	ANCHOR DOGBONE P52 8T X 6-3/4" GALV
5	1	4	100028399	ANCHOR SWIFT LIFT TENSION BAR 8T 2500PSI DAYTON P60
6	1	4	100002963	ANCHOR EYE DOGBONE P53 8T X 7-1/16" GALV
7	1	12	100005936	TERMINATOR DUCT WITH SEAL 5IN T5001
8	1	2	100005939	PULL IRON OFFSET WITH REBAR .875DIA 4.5H GALV LADWP
9	1	1	100005940	PULL IRON OFFSET WITH REBAR .875DIA 4.5H 316SS LADWP
10	1	28	100012720	INSERT PLASTIC W/ BREAK OFF SNAP 0.5IN
11	1	1	100018094	REINFORCING MAT 100018094

100012386.idw

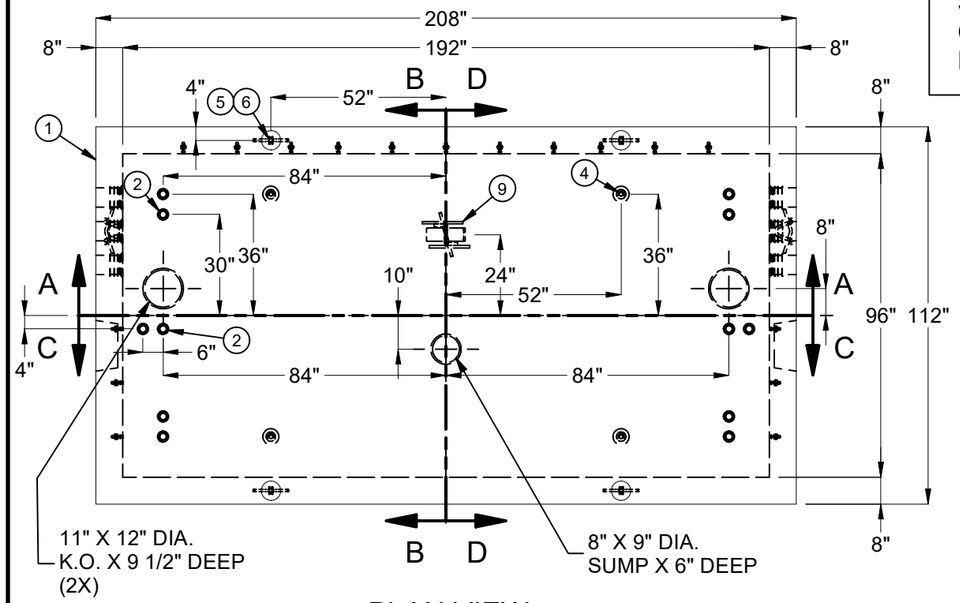

PLAN VIEW

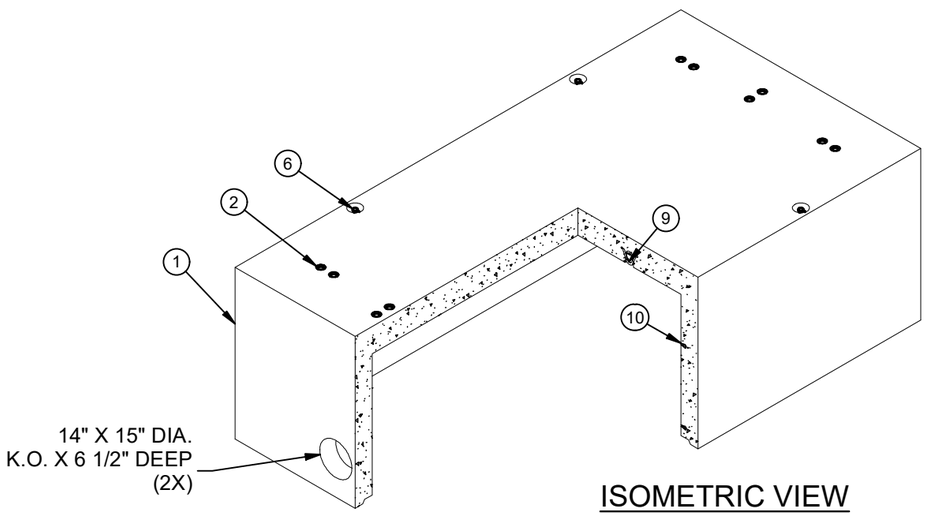

ISOMETRIC VIEW

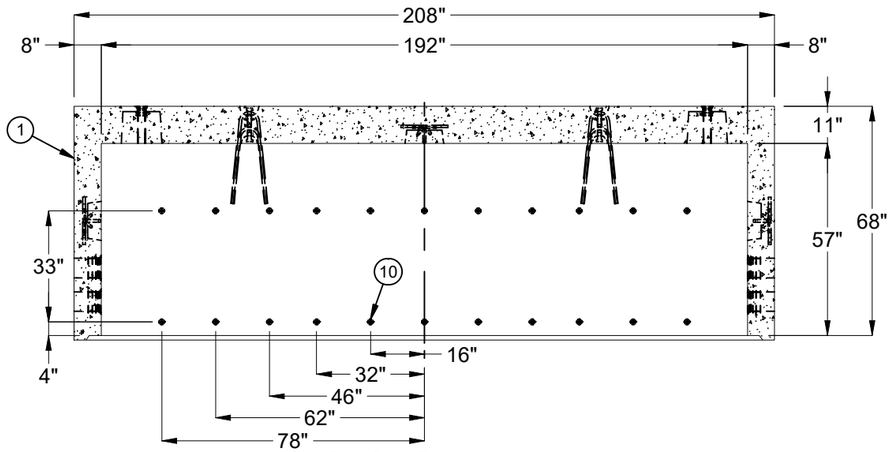

SECTION A-A

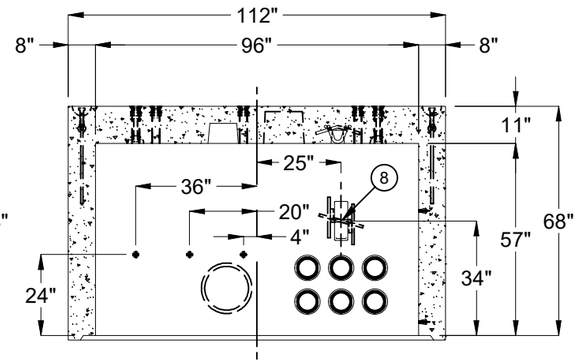

SECTION B-B

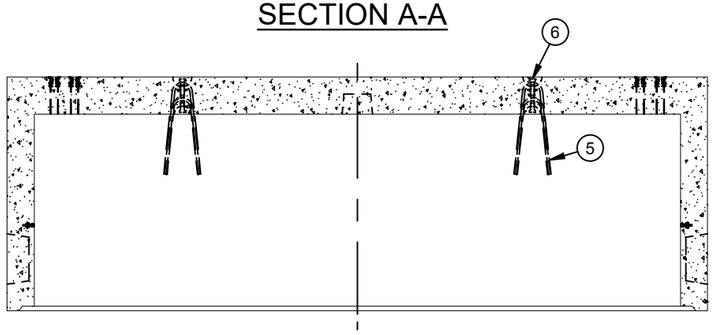

SECTION C-C

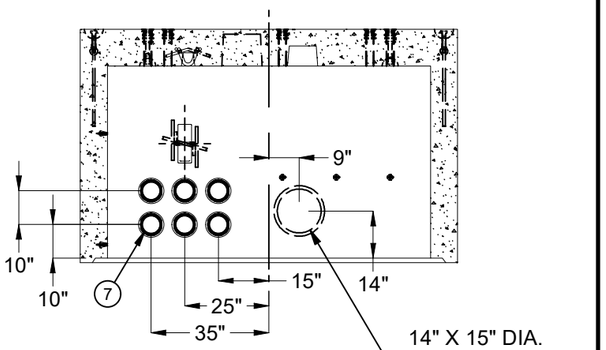

SECTION D-D

LIFTING NOTES
■ DEMOLDING: THIS CONCRETE PRODUCT IS DESIGNED TO BE LIFTED AT 2,500PSI WITH 4 LIFT CONNECTIONS EQUALLY LOADED TO 4 LIFTING POINTS AT A MINIMUM 90° SLING ANGLE, MEASURED FROM HORIZONTAL.
■ INSTALLATION: THIS CONCRETE PRODUCT IS DESIGNED TO BE LIFTED AT 5,500PSI WITH 4 LIFT CONNECTIONS EQUALLY LOADED TO 4 LIFTING POINTS AT A MINIMUM 90° SLING ANGLE, MEASURED FROM HORIZONTAL.

REVISION HISTORY			
REV	DESCRIPTION	DATE	APPROVED
B-2	UPDATED TABLE AND NOTE	7/15/2025	

BURY DEPTH:	7.2' - 9.7' to Top		
WATER LEVEL:	3.0'	APPROX. WEIGHT:	46030.05 Lbs
DESIGN SPEC:	AASHTO LRFD,ACI 318,ASTM C857	LOADING SPEC:	AASHTO HL-93
REINFORCEMENT TYPE:	Rebar	LIFTING TYPE:	Dogbone

Infrastructure
JENSEN
WWW.JENSENPRECAST.COM

©2025 Jensen Infrastructure - All rights reserved.
All materials appearing as Jensen Infrastructure documents and the like are proprietary work product and are protected under U.S. copyright and other laws.
Unless in conjunction with business conducted with Jensen Infrastructure, any use of Jensen Infrastructure work product without express, written consent is prohibited, and recipient is prohibited from distributing any and all work product to non-approved third parties under penalty of civil action. This product shall only be produced in a Jensen Infrastructure facility.

DESCRIPTION:	Vault 96192x57 Rect. Bottom Section Terminators Sump LADWP H-222 COLA CASTING LAYOUT		REV: B-2
PART NUMBER:	100012386	DRAWN BY:	C. Aguillon
CREATED:	6/13/2019	MODIFIED:	7/15/2025
			SHEET: 1 OF 1