NOTES
■ ALL PARTS TO BE STENCILED: MFG DATE / PRODUCT ID / WEIGHT.
■ EACH CONCRETE SECTION SHALL HAVE CAST-IN ON THE INSIDE "JENSEN", THE YEAR, AND THE DESIGNATION "FA-CN" OR "F-CN-SC" IF SCC MIX USED.

BILL OF MATERIALS

ITEM	UNIT QTY	QTY	PART NUMBER	DESCRIPTION
1	167.709 ft^3	167.709 ft^3	100006026	CONCRETE 5500 PSI DCI & FLY ASH LADWP MIX #30
2	1	4	100002882	ANCHOR DOGBONE P52 8T X 13-3/8" GALV
3	1	4	100002880	ANCHOR DOGBONE P52 8T X 6-3/4" GALV
4	1	14	100012720	INSERT PLASTIC W/ BREAK OFF SNAP 0.5IN
5	1	12	100003010	TERMINATOR DUCT WITH SEAL 2IN T2001
6	1	1	100005940	PULL IRON OFFSET WITH REBAR .875DIA 4.5H 316SS LADWP
7	1	2	100005939	PULL IRON OFFSET WITH REBAR .875DIA 4.5H GALV LADWP
8	8.500 in	102.000 in	100013798	PIPE PVC SCH 40 2IN DIA
9	1	1	100018082	REINFORCING MAT 100018082

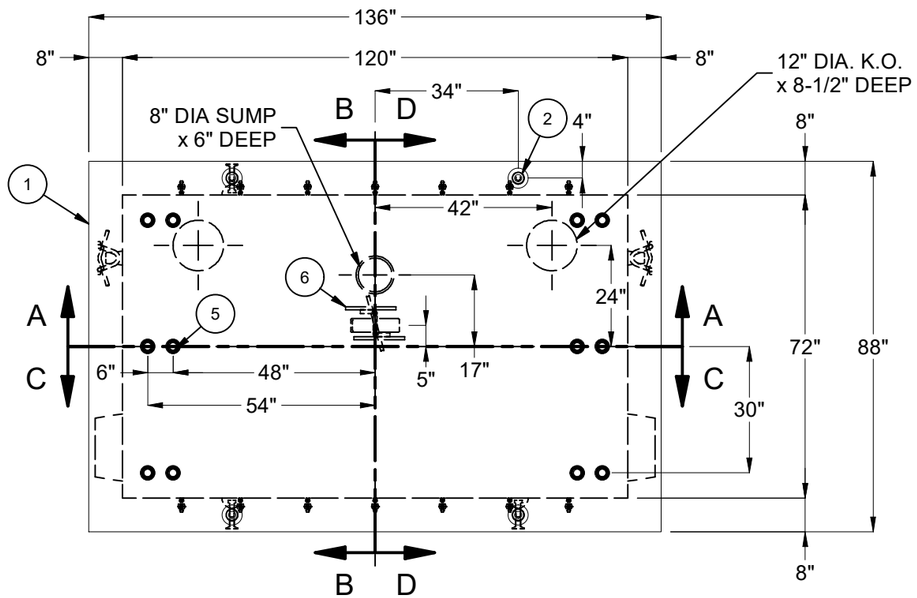

PLAN VIEW

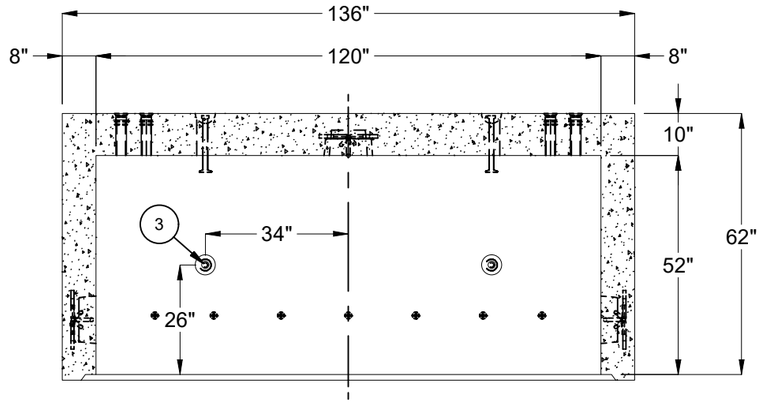

SECTION A-A

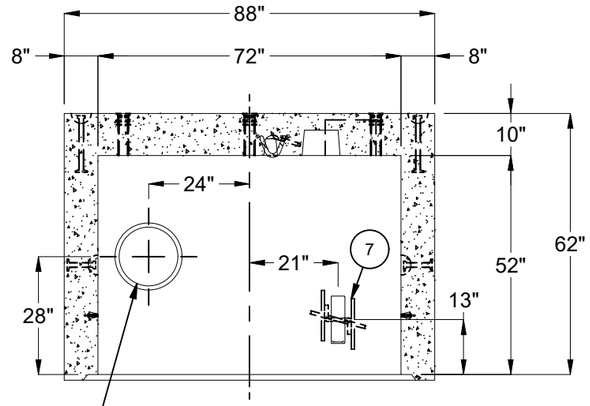

SECTION B-B

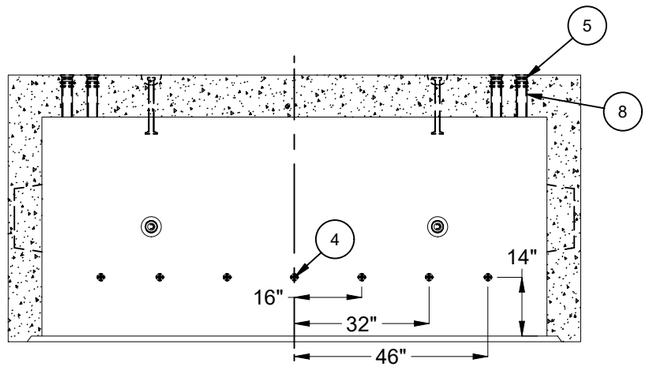

SECTION C-C

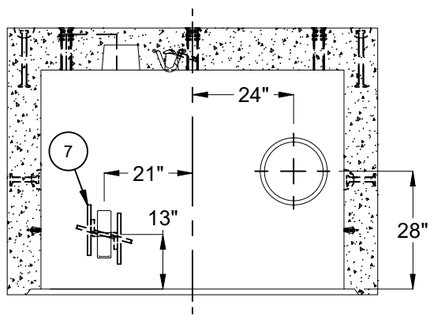

SECTION D-D

STOCKPILE - JENSEN INFRASTRUCTURE
CITY OF LOS ANGELES INSPECTION
REQUIRED WO# C0034604

LIFTING NOTES
■ INSTALLATION: THIS CONCRETE PRODUCT IS DESIGNED TO BE LIFTED AT 5500 PSI WITH 4 LIFT CONNECTIONS EQUALLY LOADED TO 4 LIFTING POINTS AT A MINIMUM 60° SLING ANGLE, MEASURED FROM HORIZONTAL.
■ DEMOLDING: THIS CONCRETE PRODUCT IS DESIGNED TO BE LIFTED AT 2500 PSI WITH 4 LIFT CONNECTIONS EQUALLY LOADED TO 4 LIFTING POINTS AT A MINIMUM 60° SLING ANGLE, MEASURED FROM HORIZONTAL.
*All rigging shall be design by a qualified professional. Loading diagrams show illustrations of possible rigging setups to achieve the required sling angle and load leg equalization. Other valid rigging configurations are possible. A qualified professional must be consulted prior to lifting.

RIGGING DIAGRAMS*

INSTALLATION	C	DEMOLDING	C

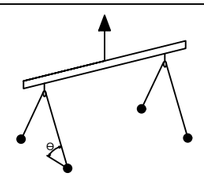

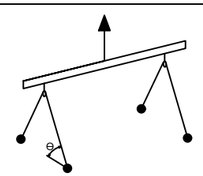

BURY DEPTH:	7.3' - 9.8' to Top		
WATER LEVEL:	3.0'	APPROX. WEIGHT:	25242.71 Lbs
DESIGN SPEC:	AASHTO LRFD,ASTM C857	LOADING SPEC:	AASHTO HL-93
REINFORCEMENT TYPE:	Rebar	LIFTING TYPE:	Dogbone

Infrastructure
JENSEN
WWW.JENSENINFRASTRUCTURE.COM

©2026 Jensen Infrastructure - All rights reserved.
All materials appearing as Jensen Infrastructure documents and the like are proprietary work product and are protected under U.S. copyright and other laws.
Unless in conjunction with business conducted with Jensen Infrastructure , any use of Jensen Infrastructure work product without express, written consent is prohibited, and recipient is prohibited from distributing any and all work product to non-approved third parties under penalty of civil action.
This product shall only be produced in a Jensen Infrastructure facility.

REVISION HISTORY

REV	DESCRIPTION	DATE	APPROVED
C-1	REVISED ORIENTATION OF TERMS	5/29/2026	

DESCRIPTION:	Vault 72120x52 Rect. Bottom Section Sump LADWP G-284 G-4 COLA CASTING LAYOUT		REV: C-1
PART NUMBER:	100012374	DRAWN BY:	J. Prado
CREATED:	10/26/2021	MODIFIED:	5/29/2026
			SHEET: 1 OF 1

100012374.idw