DESIGN NOTES
■ THIS PRODUCT MUST ONLY BE PRODUCED IN A JENSEN INFRASTRUCTURE FACILITY.
■ ALL CONCRETE MUST HAVE A 28 DAY COMPRESSIVE STRENGTH OF 5500 PSI.
■ REINFORCING STEEL MUST COMPLY WITH ASTM A615 GRADE 60 OR ASTM A706 GRADE 60.
■ SEE TITLE BLOCK FOR BURY DEPTH RANGE, WATER TABLE LEVEL, AND DESIGN AND LOADING SPECIFICATIONS.
■ SOIL UNIT WEIGHT – 120 lbs/cu.ft.
■ EQUIVALENT LATERAL EARTH PRESSURE DRY: 36 lbs/cu.ft.
■ EQUIVALENT LATERAL EARTH PRESSURE WET: 80 lbs/cu.ft.
■ UNLESS OTHERWISE NOTED OR SPECIFIED THE STRUCTURE MUST BE INSTALLED PER "JENSEN INFRASTRUCTURE UNDERGROUND UTILITY STRUCTURES INSTALLATION PROCEDURE" FOUND AT https://www.jensenprecast.com/Utility-Structures-Installation-Instructions-d2595.pdf
■ DESIGNED PER CALCS. #xxxx
■ ALL PARTS TO BE STENCILED: MFG DATE / PRODUCT ID / WEIGHT.
■ COVER DESIGN FOR 300 PSF LOADING.
■ MINIMUM EXCAVATION SIZE: 4'-9" X 4'-4" X DEPTH REQ'D.
■ VAULT TO BE PLACED ON A MIN. 6” BASE OF CRUSHER RUN FOR EASE OF INSTALLATION AND EVEN LOAD DISTRIBUTION.

BILL OF MATERIALS

ITEM	UNIT QTY	QTY	PART NUMBER	DESCRIPTION	MASS (lb)
1	1	1	100012324	Vault 3660x42 Rect. Bottom Section Knockout Ducted,Sump LADWP E-459	5175
2	1	1	200115766	Vault 3660x8 Slab Top Cast-In Cover	1120
3	1.000 ul	1.000 ul	100005749	SEALANT JOINT BUTYL RUBBER ASTM C-990 AND M198 CS-102 1IN EQUIV X14.5FT PER BOX 118FT	

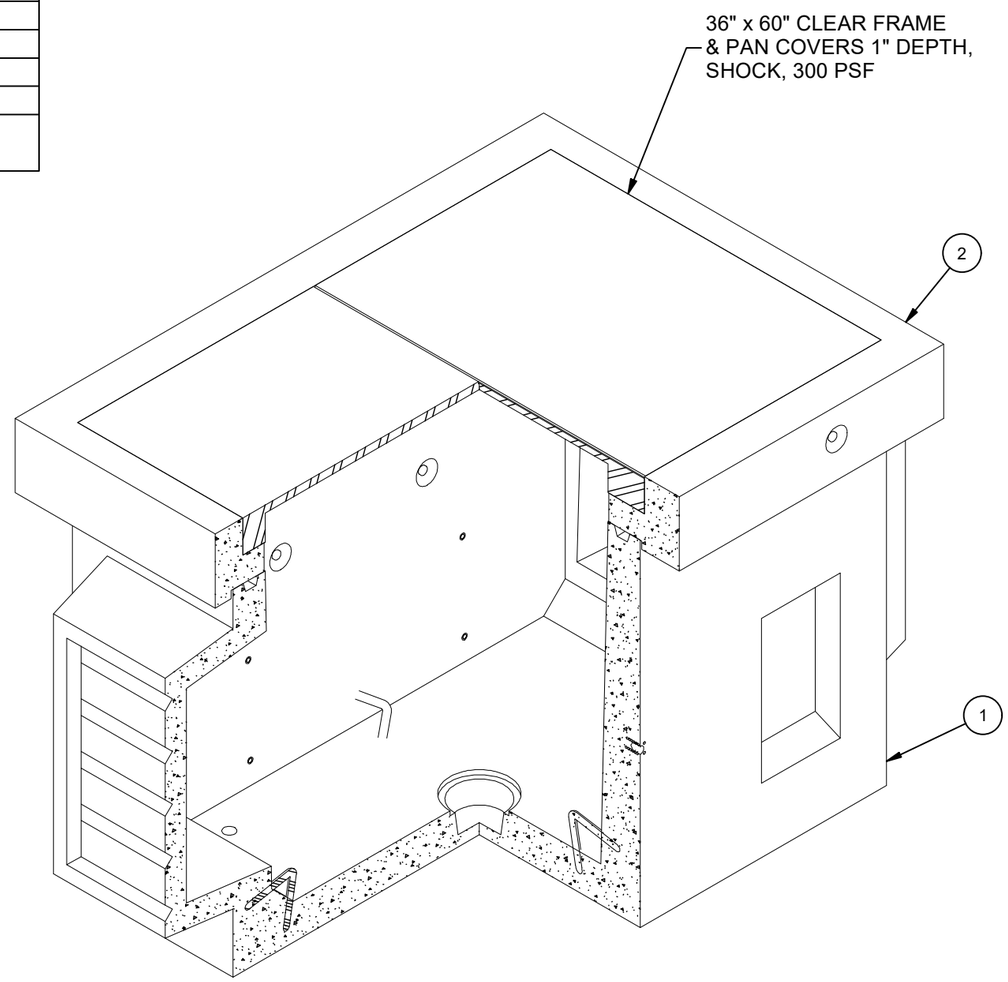

ISO VIEW

YOUR SIGNATURE IS REQUIRED

X_____

PLEASE REVIEW, SIGN AND RETURN
TO JENSEN PRECAST.
WE APPRECIATE YOUR BUSINESS

CUSTOMER TO VERIFY QTY, SIZE AND LOCATION OF OPENINGS. INFO NEEDED BY JENSEN PRIOR TO RELEASE FOR PRODUCTION. SECTION VIEWS ARE SHOWN FROM INSIDE THE STRUCTURE.

LIFTING NOTES
■ FIELD INSTALLATION: PLANT DEMOLDING: MINIMUM HANDLING CONCRETE STRENGTH F'c = 5500 PSI RIGGING EQUALIZER REQUIRED TO EQUALIZE LOAD TO 4 LIFTING POINTS WITH A SLING ANGLE BETWEEN 60° AND 90°

BURY DEPTH:	0.0' - 0.0' to Top		
WATER LEVEL:	3.0'	APPROX. WEIGHT:	6003.65 Lbs
DESIGN SPEC:	ACI 318,ASTM C857	LOADING SPEC:	300 psf Equipment
AGENCY:		AGENCY SPEC:	

Infrastructure
JENSEN
WWW.JENSENINFRASTRUCTURE.COM

©2026 Jensen Infrastructure - All rights reserved.
All materials appearing as Jensen Infrastructure documents and the like are proprietary work product and are protected under U.S. copyright and other laws.
Unless in conjunction with business conducted with Jensen Infrastructure, any use of Jensen Infrastructure work product without express, written consent is prohibited, and recipient is prohibited from distributing any and all work product to non-approved third parties under penalty of civil action.
This product shall only be produced in a Jensen Infrastructure facility.

DESCRIPTION:	Vault Layout 3660x50 Knockout Sump 36"x60"C LAYOUT REVIEW		REV: A-1
PART NUMBER:	200115765	DRAWN BY:	J. Rivas
CREATED:	3/31/2026	MODIFIED:	4/1/2026
			SHEET: 1 OF 3

200115765.idw

CUSTOMER TO VERIFY QTY, SIZE AND LOCATION OF OPENINGS.

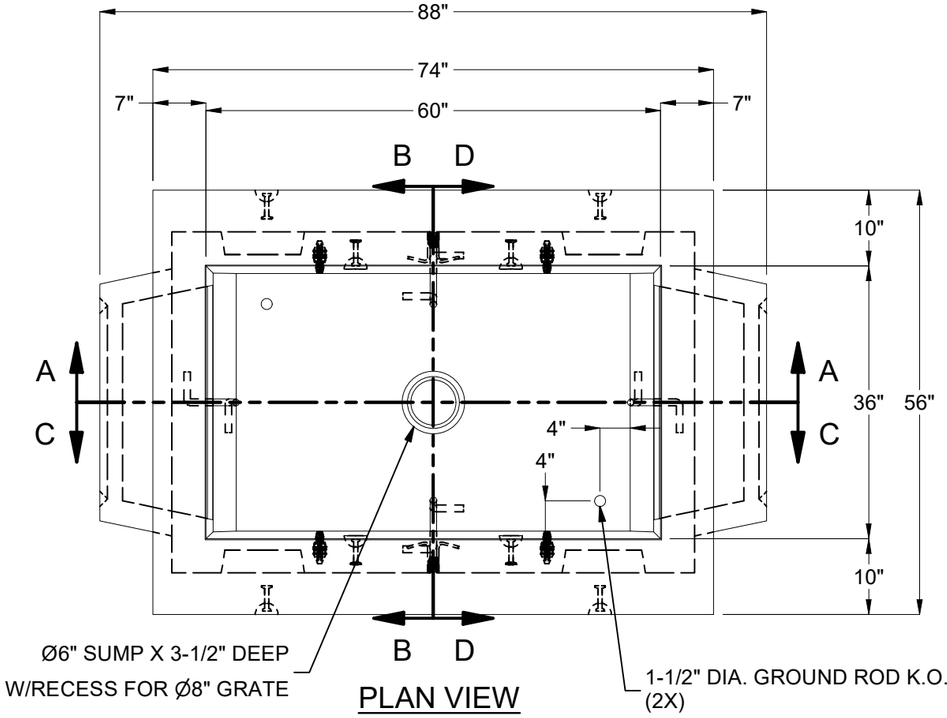

PLAN VIEW

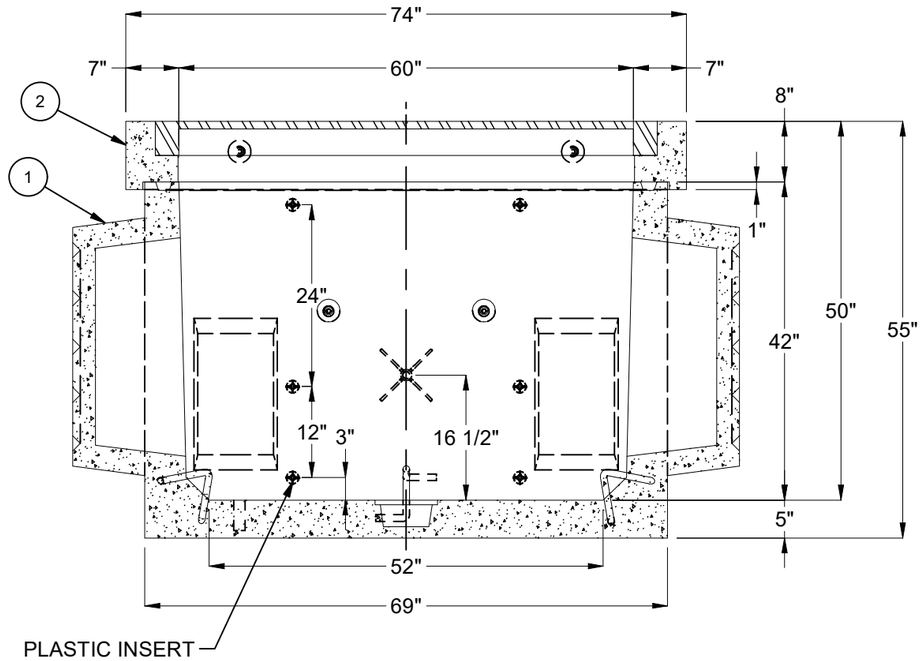

SECTION A-A

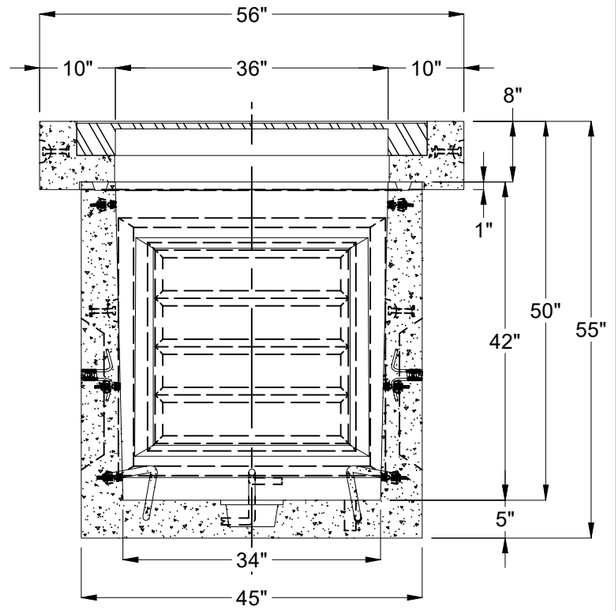

SECTION B-B

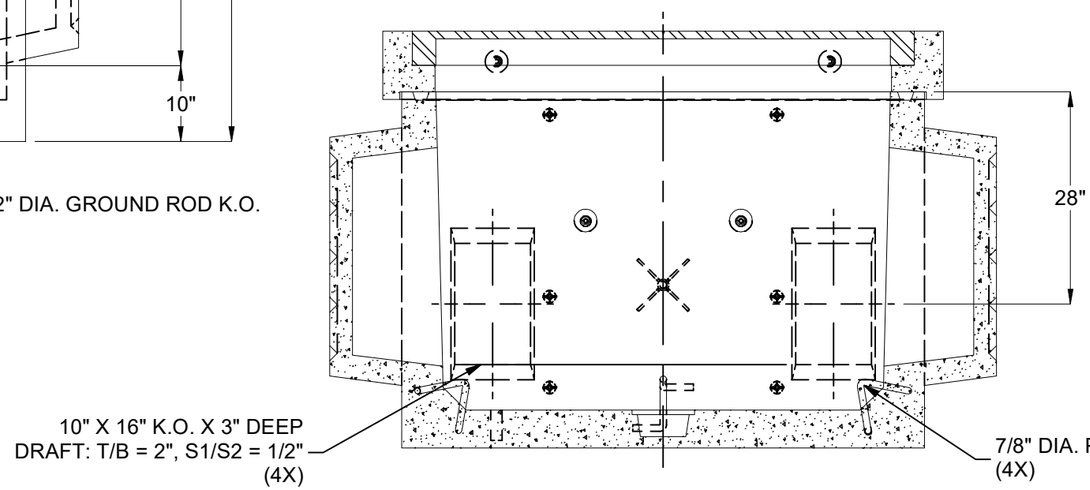

SECTION C-C

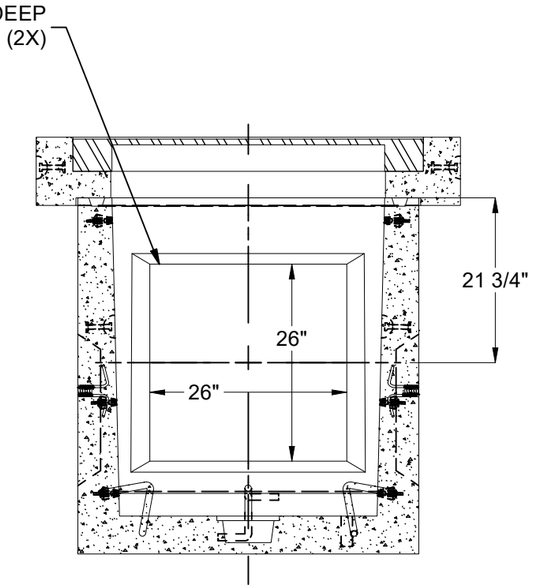

SECTION D-D

200115765.idw

BURY DEPTH:	0.0' - 0.0' to Top		
WATER LEVEL:	3.0'	APPROX. WEIGHT:	6003.65 Lbs
DESIGN SPEC:	ACI 318,ASTM C857	LOADING SPEC:	300 psf Equipment
AGENCY:		AGENCY SPEC:	

Infrastructure
JENSEN
WWW.JENSENINFRASTRUCTURE.COM

©2026 Jensen Infrastructure - All rights reserved.
All materials appearing as Jensen Infrastructure documents and the like are proprietary work product and are protected under U.S. copyright and other laws.
Unless in conjunction with business conducted with Jensen Infrastructure, any use of Jensen Infrastructure work product without express, written consent is prohibited, and recipient is prohibited from distributing any and all work product to non-approved third parties under penalty of civil action.
This product shall only be produced in a Jensen Infrastructure facility.

DESCRIPTION:	Vault Layout 3660x50 Knockout Sump 36"x60"C LAYOUT DRAWING		REV: A-1
PART NUMBER:	200115765	DRAWN BY:	J. Rivas
CREATED:	3/31/2026	MODIFIED:	4/1/2026
			SHEET: 2 OF 3

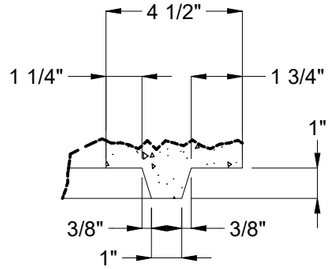

DETAIL P

INSIDE

OUTSIDE

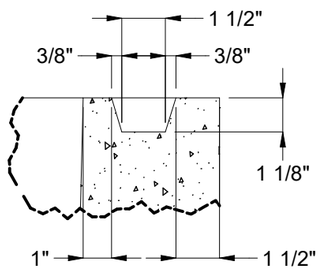

DETAIL M

KEY DETAIL

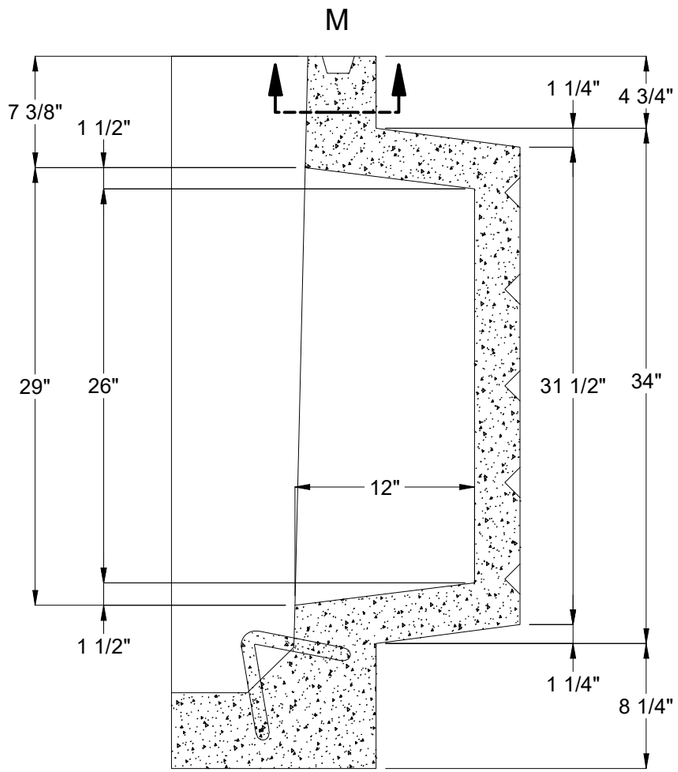

ELEVATION

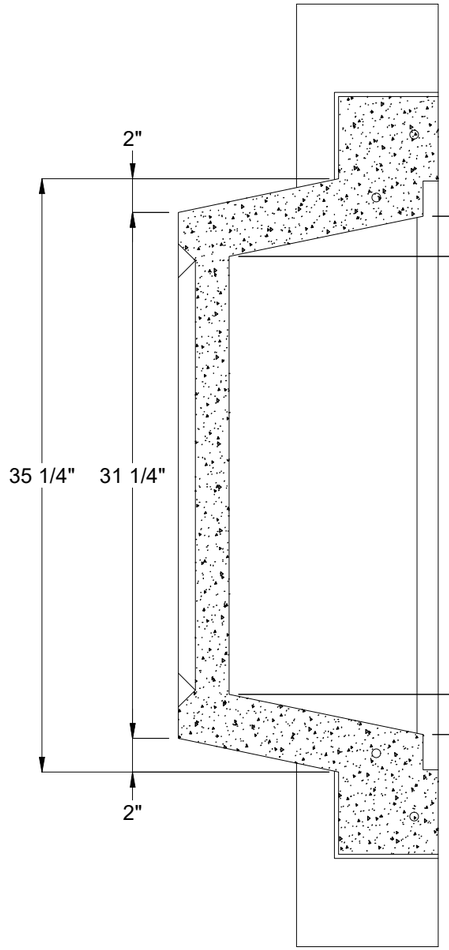

DETAIL PLAN

200115765.idw

26" X 26" DEEP KNOCK OUT

BURY DEPTH:	0.0' - 0.0' to Top		
WATER LEVEL:	3.0'	APPROX. WEIGHT:	6003.65 Lbs
DESIGN SPEC:	ACI 318,ASTM C857	LOADING SPEC:	300 psf Equipment
AGENCY:		AGENCY SPEC:	

Infrastructure
JENSEN
WWW.JENSENINFRASTRUCTURE.COM

©2026 Jensen Infrastructure - All rights reserved.
All materials appearing as Jensen Infrastructure documents and the like are proprietary work product and are protected under U.S. copyright and other laws.
Unless in conjunction with business conducted with Jensen Infrastructure, any use of Jensen Infrastructure work product without express, written consent is prohibited, and recipient is prohibited from distributing any and all work product to non-approved third parties under penalty of civil action.
This product shall only be produced in a Jensen Infrastructure facility.

DESCRIPTION:	Vault Layout 3660x50 Knockout Sump 36"x60"C LAYOUT DRAWING		REV: A-1
PART NUMBER:	200115765	DRAWN BY:	J. Rivas
CREATED:	3/31/2026	MODIFIED:	4/1/2026
			SHEET: 3 OF 3