NOTES
■ ALL PARTS TO BE STENCILED: MFG DATE / JOB NUMBER / PRODUCT ID / WEIGHT.

BILL OF MATERIALS

ITEM	UNIT QTY	QTY	PART NUMBER	DESCRIPTION
1	2.283 ft^3	2.283 ft^3	100005993	CONCRETE 5500 PSI DRYCAST MIX
2	1	3	100002867	ANCHOR DOGBONE LIFT 2T X 3-3/8 GALV MB DB-52
3	1	1	100002390	REINF HOOP STEEL .25235DIA GA 35DIA

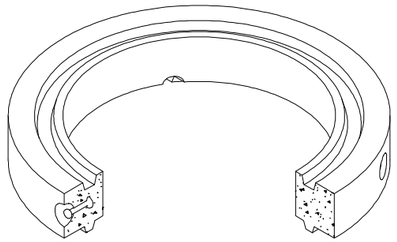

ISO VIEW

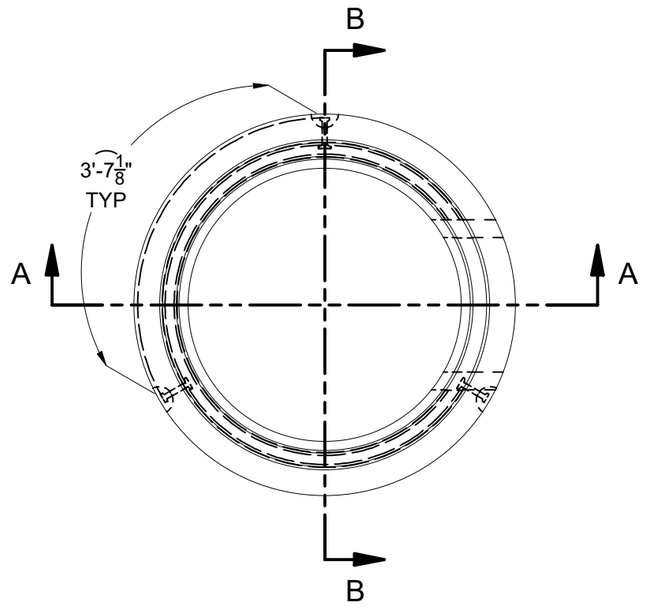

PLAN VIEW

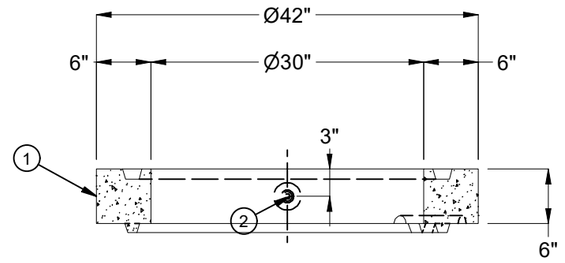

SECTION A-A

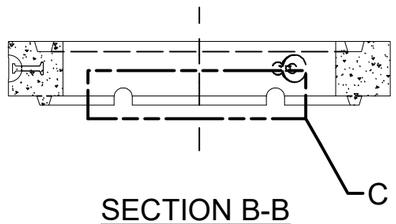

SECTION B-B

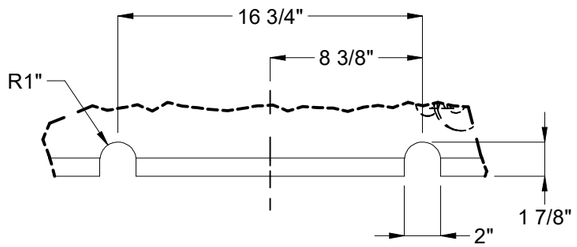

DETAIL C
NOTCHES FOR KNURLED STEP

LIFTING NOTES
■ THIS CONCRETE PRODUCT IS DESIGNED TO BE LIFTED AT 2,500 PSI WITH 3 LIFT CONNECTIONS EQUALLY LOADED TO 3 LIFTING POINTS AT A MINIMUM 90° SLING ANGLE, MEASURED FROM HORIZONTAL.

BURY DEPTH:	0.0' - 6.0' to Top of Section		
WATER LEVEL:	3.0'	WEIGHT:	345.83 Lbs
DESIGN SPEC:	ASTM C478	LOADING SPEC:	A-16 (AASHTO HS20-44)
REINFORCEMENT TYPE:	Rebar	LIFTING TYPE:	Dogbone

JENSEN PRECAST EST. 1968

WWW.JENSENPRECAST.COM

©2018 Jensen Precast- All rights reserved.
All materials appearing as Jensen Precast documents and the like are proprietary work product and are protected under U.S. copyright and other laws.
Unless in conjunction with business conducted with Jensen Precast, any use of Jensen Precast work product without express, written consent is prohibited, and recipient is prohibited from distributing any and all work product to non-approved third parties under penalty of civil action.

REVISION HISTORY			
REV	DESCRIPTION	DATE	APPROVED
B	INITIAL RELEASE	12/20/2019	

DESCRIPTION: Grade Ring D3042x6 CASTING LAYOUT				REV: B
PART NUMBER:	100012316	DRAWN BY:	N. Chand	SHEET: 1 OF 1
CREATED:	10/12/2018	MODIFIED:	3/23/2020	

100012316.idw