NOTES
■ ALL PARTS TO BE STENCILED: MFG DATE / JOB NUMBER / PRODUCT ID / WEIGHT.

BILL OF MATERIALS

ITEM	UNIT QTY	QTY	PART NUMBER	DESCRIPTION
1	98.527 ft^3	98.527 ft^3	100024079	CONCRETE #19 MOD SCC
2	1	48	100005936	TERMINATOR DUCT WITH SEAL 5IN T5001
3	1	4	100002877	ANCHOR DOGBONE P52 4T X 9-1/2" GALV
4	1	4	100002874	ANCHOR DOGBONE P52 4T X 4-3/4" GALV
5	1	16	100012720	INSERT PLASTIC W/ BREAK OFF SNAP 0.5IN
6	1	4	100003026	PULL IRON OFFSET .875DIA 6H X 5W X 10.875L GALV
7	1	1	100008132	RFI PLASTIC TAG IDENCIA
8	1	6	100005933	GROUND INSERTS BOTTLE ROCKET BRASS 1/2X16 STEEL ROD 12G69
9	1	1	100018025	REINFORCING MAT 100018025

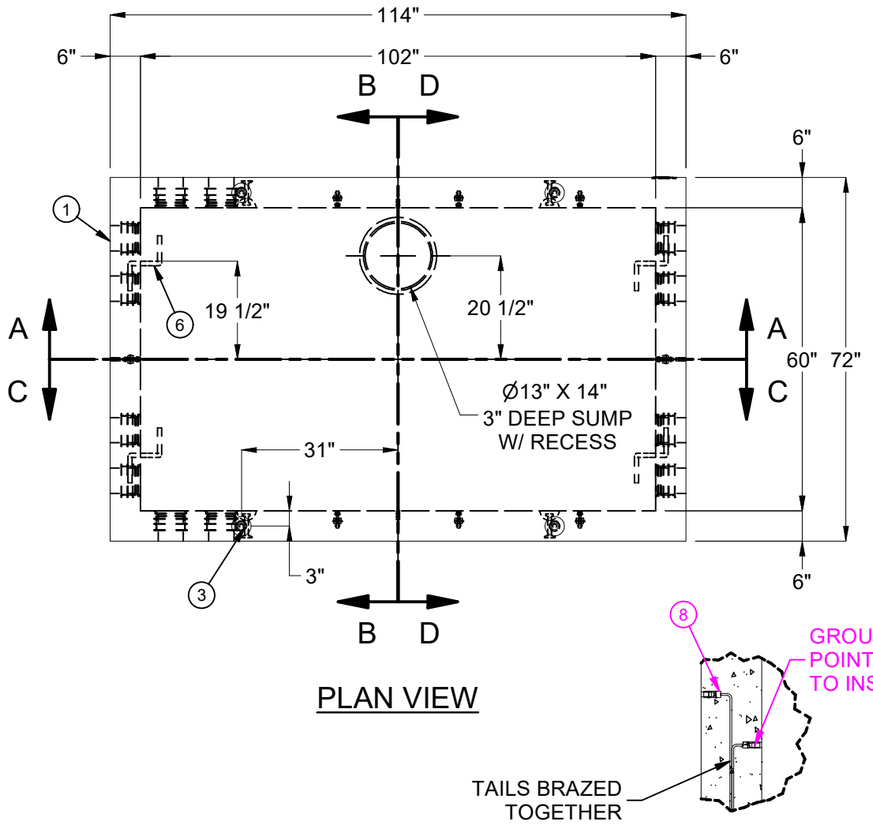

PLAN VIEW

DETAIL E
EQUIPMENT GROUNDING

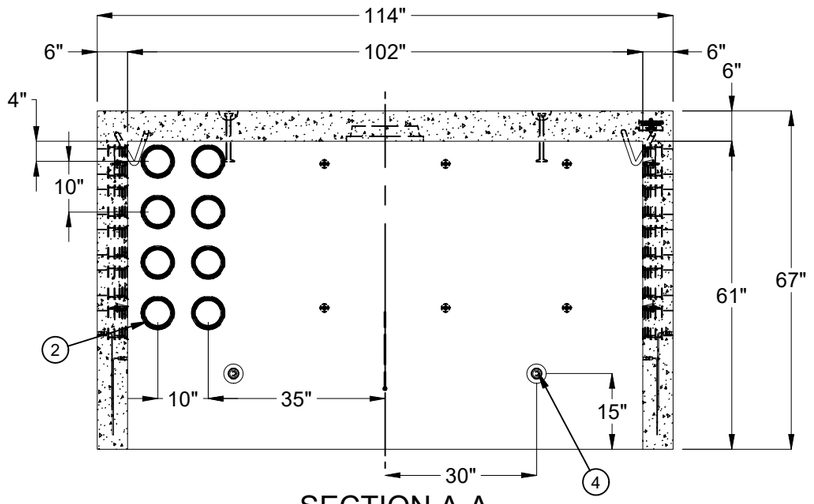

SECTION A-A

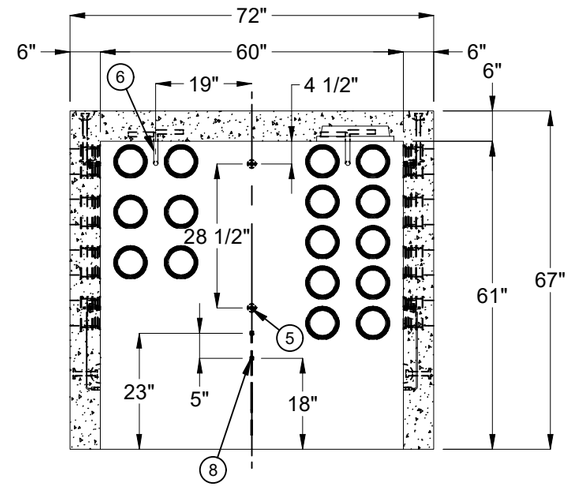

SECTION B-B

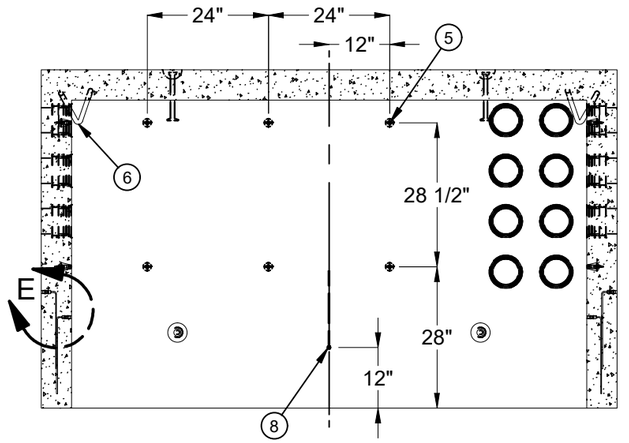

SECTION C-C

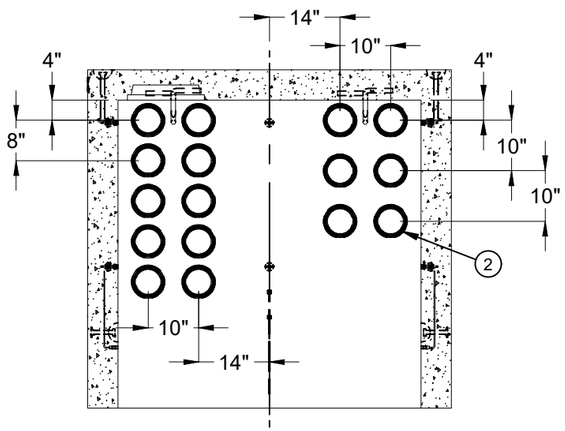

SECTION D-D

LIFTING NOTES
■ DEMOLDING: THIS CONCRETE PRODUCT IS DESIGNED TO BE LIFTED AT 2,500 PSI WITH 4 LIFT CONNECTIONS EQUALLY LOADED 4 LIFTING POINTS AT A MINIMUM 90° SLING ANGLE, MEASURED FROM HORIZONTAL.
■ INSTALLATION: THIS CONCRETE PRODUCT IS DESIGNED TO BE LIFTED AT 5,500 PSI WITH 4 LIFT CONNECTIONS EQUALLY LOADED TO 4 LIFTING POINTS AT A MINIMUM 60° SLING ANGLE, MEASURED FROM HORIZONTAL.

BURY DEPTH:	0.4' - 0.4' to Top		
WATER LEVEL:	3.0'	WEIGHT:	14842.55 Lbs
DESIGN SPEC:	ASTM C857,ACI 318	LOADING SPEC:	A-16 (AASHTO HS20-44)
REINFORCEMENT TYPE:	Rebar	LIFTING TYPE:	Dogbone

JENSEN PRECAST EST. 1968

WWW.JENSENPRECAST.COM

©2018 Jensen Precast- All rights reserved.
All materials appearing as Jensen Precast documents and the like are proprietary work product and are protected under U.S. copyright and other laws.
Unless in conjunction with business conducted with Jensen Precast, any use of Jensen Precast work product without express, written consent is prohibited, and recipient is prohibited from distributing any and all work product to non-approved third parties under penalty of civil action.

REVISION HISTORY			
REV	DESCRIPTION	DATE	APPROVED
B-1	IFS SYNC RELEASE	10/29/2020	

DESCRIPTION: Vault 60102x61 Rect. Bottom Section Terminators Sump RIVERSIDE UGS-010, SB-4 CASTING LAYOUT				REV: B-1
PART NUMBER:	100012305	DRAWN BY:	D.Mejia	SHEET: 1 OF 1
CREATED:	8/9/2019	MODIFIED:	6/8/2021	

100012305.idw