DESIGN NOTES
■ CONCRETE DESIGNED IN ACCORDANCE WITH L.A.D.W.P. SPEC. P178-R8, ASTM C857, USING 5,500 PSI COMPRESSIVE STRENGTH CONCRETE AT 28 DAYS AND 60,000 PSI YIELD STRENGTH ASTM A-706 STEEL REINFORCEMENT PER CALC. #33363.
■ CONCRETE MIX USED IN POURING THIS PRODUCT SHALL USE FLY ASH AND DCI AS AN ADMIXTURE.
■ EACH CONCRETE SECTION SHALL BE STENCILED ON THE INSIDE & OUTSIDE WITH "JENSEN", THE DESIGNATION "DWP/FA-CN" or "DWP/F-CN-SC" IF SCC MIX USED, AND THE DATE OF POUR.
■ EACH CONCRETE SECTION SHALL HAVE CAST-IN ON THE INSIDE "JENSEN", THE YEAR, AND THE DESIGNATION "FA-CN" or "F-CN-SC" IF SCC MIX USED.

BILL OF MATERIALS

ITEM	UNIT QTY	QTY	PART NUMBER	DESCRIPTION
1	16.211 ft^3	16.211 ft^3	100006028	CONCRETE 5500 PSI #17 SCC LADWP
2	1	4	100002867	ANCHOR DOGBONE P52 2T X 3-3/8" GALV
3	1	8	100008114	INSERT THREADED METAL 1/2-13 UNC 1-1/2 IN OPEN
4	1	3	100006104	STRUT C-CHANNEL CONCRETE INSERT 1-5/8 X 1-5/8 W/ANCHORS N-3200 68IN
5	1	1	100018000	REINFORCING MAT 100018000

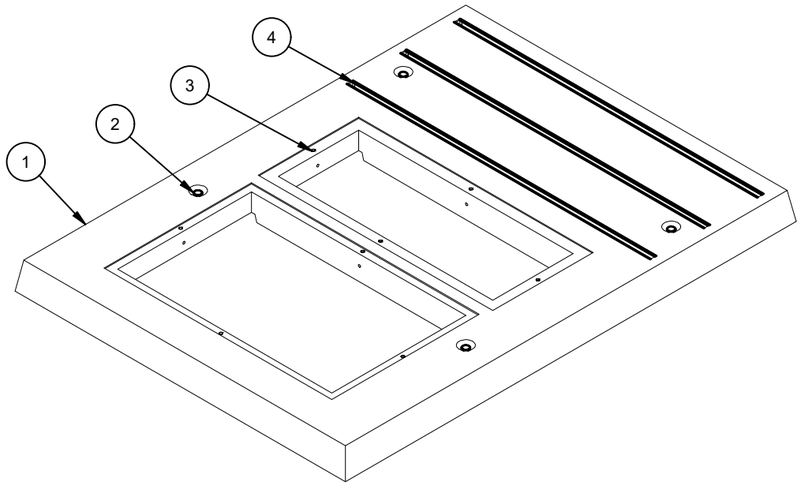

ISOMETRIC VIEW

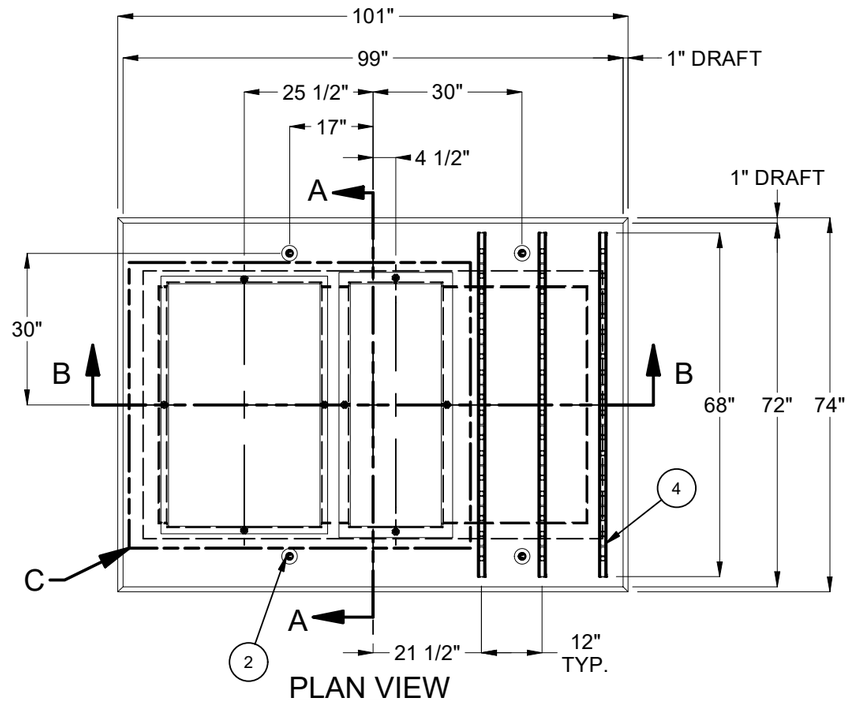

PLAN VIEW

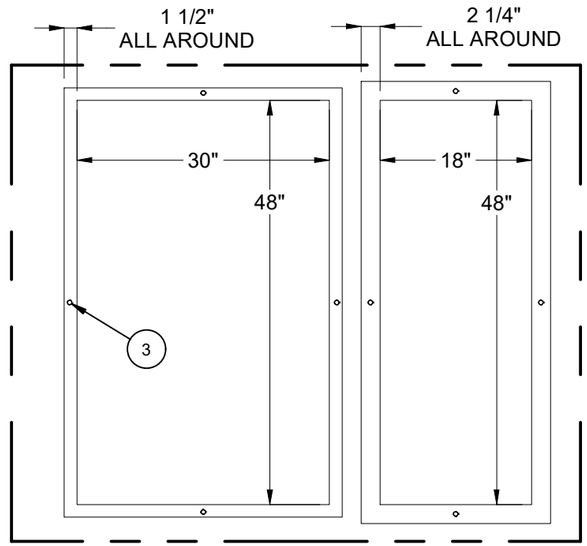

DETAIL C
(1/4" RECESS AT OPENING)

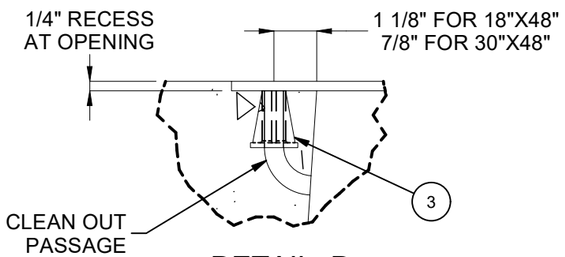

DETAIL D
(INSERTS AROUND
OPENING)

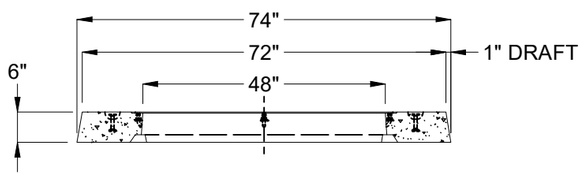

SECTION A-A

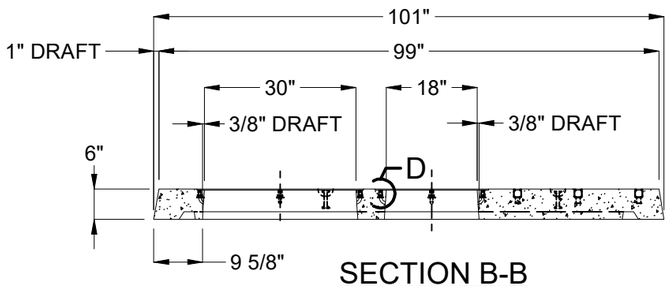

SECTION B-B

LIFTING NOTES
■ INSTALLATION: THIS CONCRETE PRODUCT IS DESIGNED TO BE LIFTED AT 5500 PSI WITH 4 LIFT CONNECTIONS EQUALLY LOADED TO 4 LIFTING POINTS AT A MINIMUM 60° SLING ANGLE, MEASURED FROM HORIZONTAL.
■ DEMOLDING: THIS CONCRETE PRODUCT IS DESIGNED TO BE LIFTED AT 2500 PSI WITH 4 LIFT CONNECTIONS EQUALLY LOADED TO 4 LIFTING POINTS AT A MINIMUM 60° SLING ANGLE, MEASURED FROM HORIZONTAL.
*All rigging shall be design by a qualified professional. Loading diagrams show illustrations of possible rigging setups to achieve the required sling angle and load leg equalization. Other valid rigging configurations are possible. A qualified professional must be consulted prior to lifting.

RIGGING DIAGRAMS*

INSTALLATION	C	DEMOLDING	C

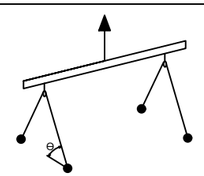

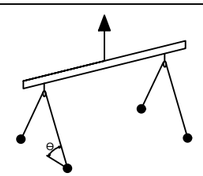

REVISION HISTORY			
REV	DESCRIPTION	DATE	APPROVED
D-1-1	UPDATED TITLE BLOCK & DESCRIPTION	11/16/2026	

BURY DEPTH:	-0.4' - -0.4' to Top		
WATER LEVEL:	Below Structure	APPROX. WEIGHT:	2464.19 Lbs
DESIGN SPEC:	ACI 318,ASTM C857	LOADING SPEC:	Agency Specified
REINFORCEMENT TYPE:	Rebar	LIFTING TYPE:	Dogbone

Infrastructure
JENSEN
WWW.JENSENINFRASTRUCTURE.COM

©2026 Jensen Infrastructure - All rights reserved.
All materials appearing as Jensen Infrastructure documents and the like are proprietary work product and are protected under U.S. copyright and other laws.
Unless in conjunction with business conducted with Jensen Infrastructure , any use of Jensen Infrastructure work product without express, written consent is prohibited, and recipient is prohibited from distributing any and all work product to non-approved third parties under penalty of civil action.
This product shall only be produced in a Jensen Infrastructure facility.

DESCRIPTION:	Pad 7299x6 30"x48"E LADWP UB721-03 R13 GA CASTING LAYOUT		REV: D-1-1
PART NUMBER:	100012279	DRAWN BY:	P. Monroy
CREATED:	6/5/2019	MODIFIED:	11/16/2026
			SHEET: 1 OF 1

100012279.idw