BILL OF MATERIALS

ITEM	QTY	PART NUMBER	DESCRIPTION
1	1	200014844	Pull Box 4884x42 Rect. Bottom Section
2	1	200014842	Pad 72102x6
3	6	100003512	Hex_Bolt - 1/2-13 UNC - 2.5 - Zinc
4	1	100007038	COVER 3048 POLYMER EDISON

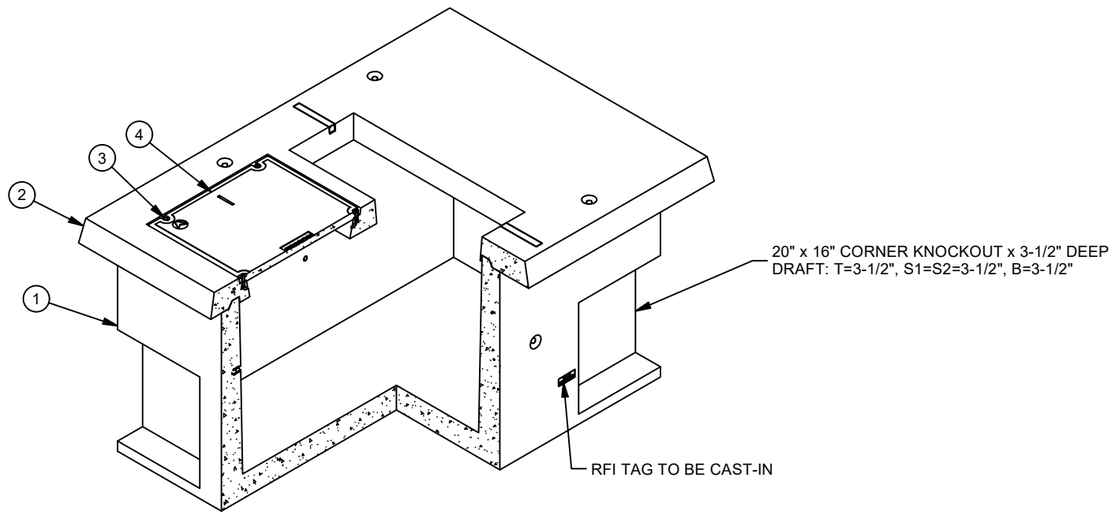

ISO VIEW

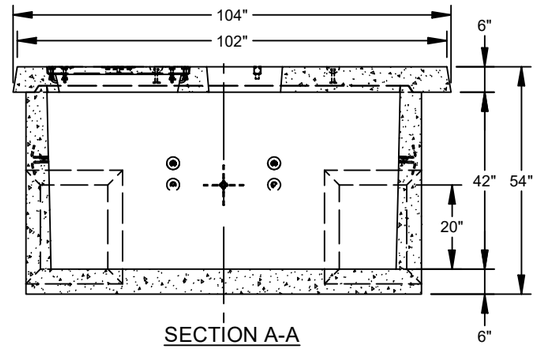

SECTION A-A

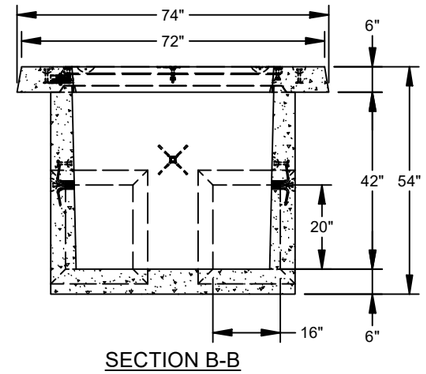

SECTION B-B

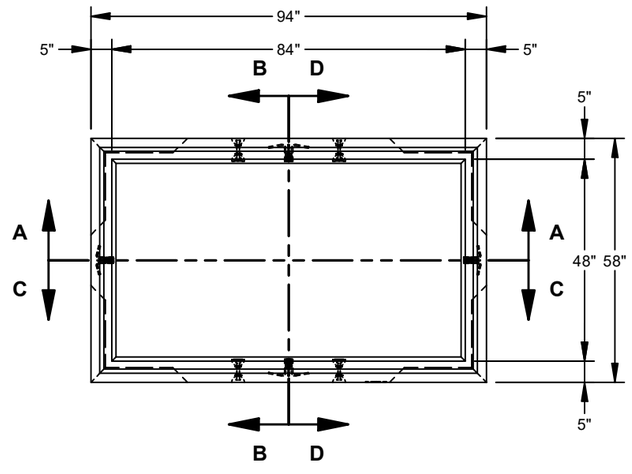

PLAN VIEW W/O TRANSFORMER PAD

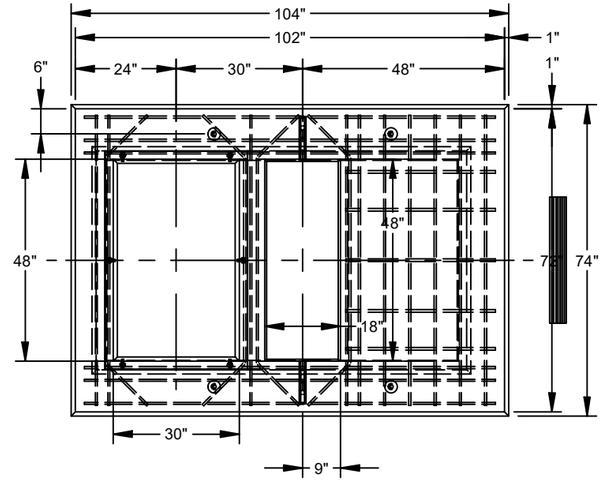

PLAN VIEW OF TRANSFORMER PAD

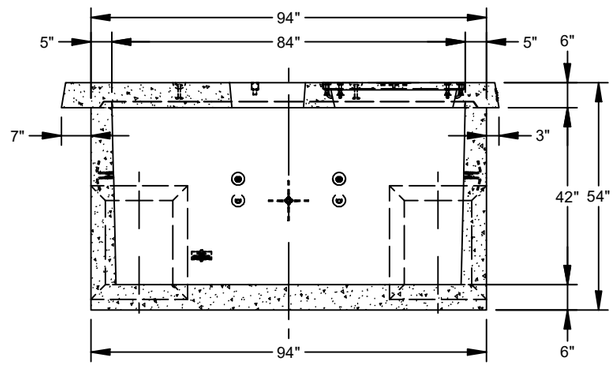

SECTION C-C

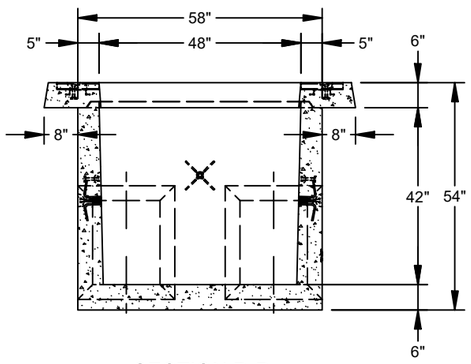

SECTION D-D

NOTES:

- SUBSTRUCTURE CONCRETE DESIGNED PER ASTM C857, LOAD DESIGNATION A16 (AASHTO H-20-440) TRAFFIC LOADING ASTM A706 GR.60. PAD CONCRETE DESIGNED PER LOAD DESIGNATION A-0.3 (300 PSF) PARKWAY LOADING, USING 5,500 PSI CONCRETE AND ASTM A-1064 GR.75 STEEL REINFORMENT PER CALC. #31655.
- COVER IS DESIGNED FOR PARKWAY LOADING PER WESTERN UNDERGROUND COMMITTEE (W.U.C. 3.6)
- PAD AND ENCLOSURE DESIGNED FOR 11,000 LB. (TRANSFORMER) VERTICAL DEAD LOAD.
- ENCLOSURE TO BE PLACED ON A MIN 6" BASE OF CRUSHER RUN FOR EASE OF INSTALLATION AND END LOAD DISTRIBUTION.
- ALL PARTS TO BE STENCILED: MFG DATE / JOB NUMBER / PRODUCT ID / WEIGHT.
- MINIMUM EXCAVATION SIZE: 5'-10" X 8'-10" DEPTH REQ'D.

BURY DEPTH:	AT GRADE to Top of Section		
WATER LEVEL:	3'-0"	WEIGHT:	10377.49 Lbs
DESIGN SPEC:	ASTM C857	LOADING SPEC:	A-16 (AASHTO HS20-44)
REINFORCEMENT TYPE:	Rebar	LIFTING TYPE:	Dogbone

JENSEN PRECAST EST. 1968

WWW.JENSENPRECAST.COM

©2018 Jensen Precast- All rights reserved.
All materials appearing as Jensen Precast documents and the like are proprietary work product and are protected under U.S. copyright and other laws.
Unless in conjunction with business conducted with Jensen Precast, any use of Jensen Precast work product without express, written consent is prohibited, and recipient is prohibited from distributing any and all work product to non-approved third parties under penalty of civil action.

DESCRIPTION: 6' - 0" x 8' - 6" TRANSFORMER PAD W/ 4' - 0" x 7' - 0" ENCLOSURE x 42" DEEP

REV:

PART NUMBER:	200014843	DRAWN BY:	J. Prado
CREATED:	2/27/2018	MODIFIED:	4/24/2019

SHEET: 1 OF 1

200014847.idw