DESIGN NOTES
■ CONCRETE DESIGNED IN ACCORDANCE WITH L.A.D.W.P. SPEC. P178-R8, ACI 318, AND ASTM C857, USING 5,500 PSI COMPRESSIVE STRENGTH CONCRETE AT 28 DAYS AND 60,000 PSI YIELD STRENGTH ASTM A-706 STEEL REINFORCEMENT PER CALC. #30615.
■ CONCRETE MIX USED IN POURING THIS PRODUCT SHALL USE FLY ASH AND DCI AS AN ADMIXTURE.
■ EACH CONCRETE SECTION SHALL BE STENCILED ON THE INSIDE & OUTSIDE WITH "JENSEN", THE DESIGNATION "DWP/FA-CN" or "DWP/F-CN-SC" IF SCC MIX USED, AND THE DATE OF POUR.
■ EACH CONCRETE SECTION SHALL HAVE CAST-IN ON THE INSIDE "JENSEN", THE YEAR, AND THE DESIGNATION "FA-CN" or "F-CN-SC" IF SCC MIX USED.

BILL OF MATERIALS

ITEM	UNIT QTY	QTY	PART NUMBER	DESCRIPTION
1	13.073 ft^3	13.073 ft^3	100006028	CONCRETE 5500 PSI #17 SCC LADWP
2	1	4	100002867	ANCHOR DOGBONE P52 2T X 3-3/8" GALV
3	1	2	100006101	STRUT C-CHANNEL CONCRETE INSERT 1-5/8 X 1-5/8 W/ANCHORS N-3200 56IN
4	1	8	100008114	INSERT THREADED METAL 1/2-13 UNC 1-1/2 IN OPEN
5	1	1	100017996	REINFORCING MAT 100017996

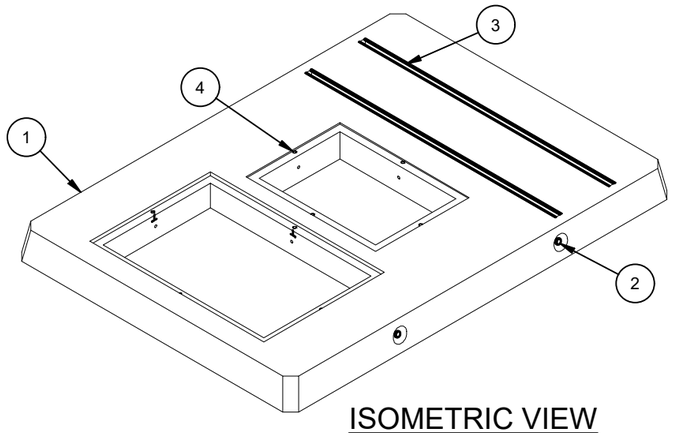

ISOMETRIC VIEW

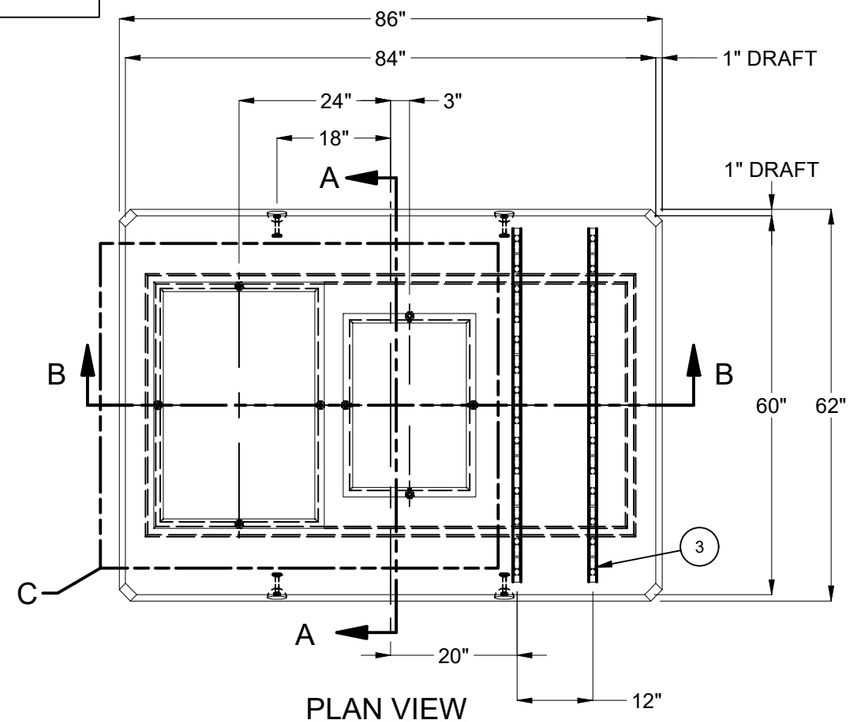

PLAN VIEW

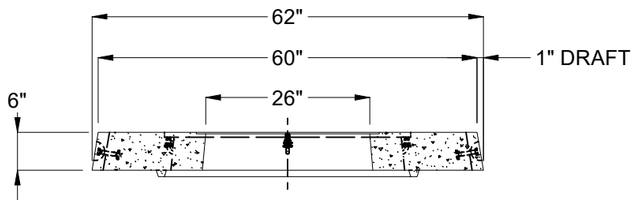

SECTION A-A

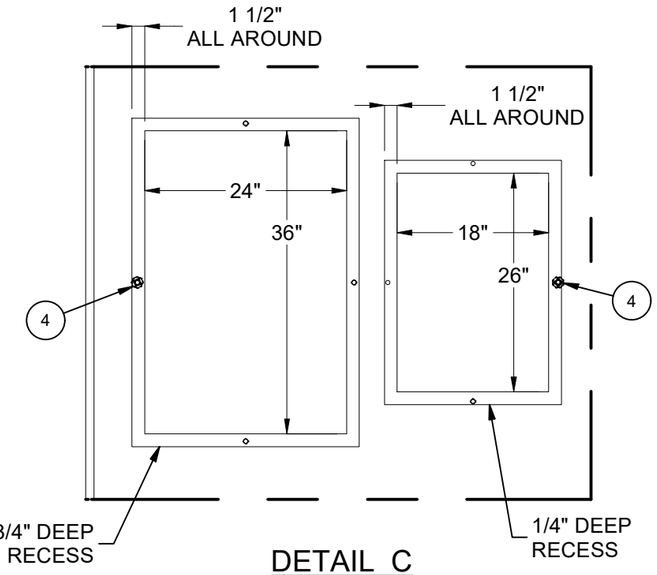

DETAIL C

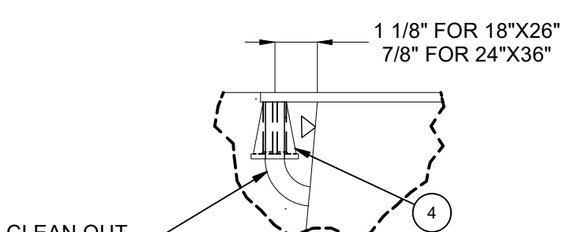

DETAIL D
(INSERTS AROUND OPENING)

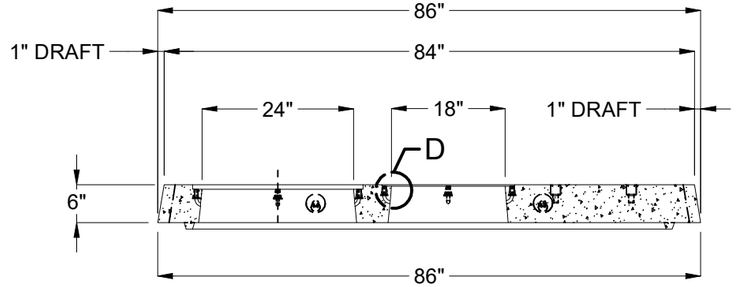

SECTION B-B

LIFTING NOTES
■ INSTALLATION: THIS CONCRETE PRODUCT IS DESIGNED TO BE LIFTED AT 5500 PSI WITH 4 LIFT CONNECTIONS EQUALLY LOADED TO 4 LIFTING POINTS AT A MINIMUM 60° SLING ANGLE, MEASURED FROM HORIZONTAL.
■ DEMOLDING: THIS CONCRETE PRODUCT IS DESIGNED TO BE LIFTED AT 2500 PSI WITH 4 LIFT CONNECTIONS EQUALLY LOADED TO 4 LIFTING POINTS AT A MINIMUM 60° SLING ANGLE, MEASURED FROM HORIZONTAL.
*All rigging shall be design by a qualified professional. Loading diagrams show illustrations of possible rigging setups to achieve the required sling angle and load leg equalization. Other valid rigging configurations are possible. A qualified professional must be consulted prior to lifting.

RIGGING DIAGRAMS*

INSTALLATION	C	DEMOLDING	C

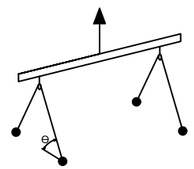

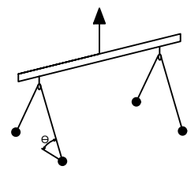

BURY DEPTH:	-0.4' - -0.4' to Top		
WATER LEVEL:	3.0'	APPROX. WEIGHT:	1987.76 Lbs
DESIGN SPEC:	ACI 318,ASTM C857	LOADING SPEC:	300 psf Equipment
REINFORCEMENT TYPE:	Rebar	LIFTING TYPE:	Dogbone

Infrastructure
JENSEN
WWW.JENSENPRECAST.COM

©2025 Jensen Infrastructure - All rights reserved.
All materials appearing as Jensen Infrastructure documents and the like are proprietary work product and are protected under U.S. copyright and other laws.
Unless in conjunction with business conducted with Jensen Infrastructure , any use of Jensen Infrastructure work product without express, written consent is prohibited, and recipient is prohibited from distributing any and all work product to non-approved third parties under penalty of civil action. This product shall only be produced in a Jensen Infrastructure facility.

REVISION HISTORY

REV	DESCRIPTION	DATE	APPROVED
B-1	INITIAL RELEASE	12/9/2025	

DESCRIPTION:	Pad 6084x6 24"x36"E LADWP UB721-09 R12 CASTING LAYOUT	REV:	B-1
PART NUMBER:	100012275	DRAWN BY:	J. Prado
CREATED:	3/20/2024	MODIFIED:	12/9/2025
		SHEET:	1 OF 1

100012275.idw