DESIGN NOTES
■ DESIGNED IN ACCORDANCE WITH AASHTO HS20-44 TRAFFIC BRIDGE LOADING USING 5,500 PSI COMPRESSIVE STRENGTH CONCRETE AND 60,000 PSI YIELD STRENGTH ASTM A-706 STEEL REINFORCEMENT PER CALCS. #31435.
■ ALL PARTS TO BE STENCILED: MFG DATE / JOB NUMBER / PRODUCT ID / WEIGHT.

BILL OF MATERIALS

ITEM	UNIT QTY	QTY	PART NUMBER	DESCRIPTION
1	3.660 ft^3	3.660 ft^3	100024079	CONCRETE #19 SCC
2	1	1	100006600	CAS2-3660-CH2-TRX-G-FONT-OH06
3	1	4	100002867	ANCHOR DOGBONE P52 2T X 3-3/8" GALV
4	1	1	300119497	REINFORCING MAT 300119497

100012273.idw

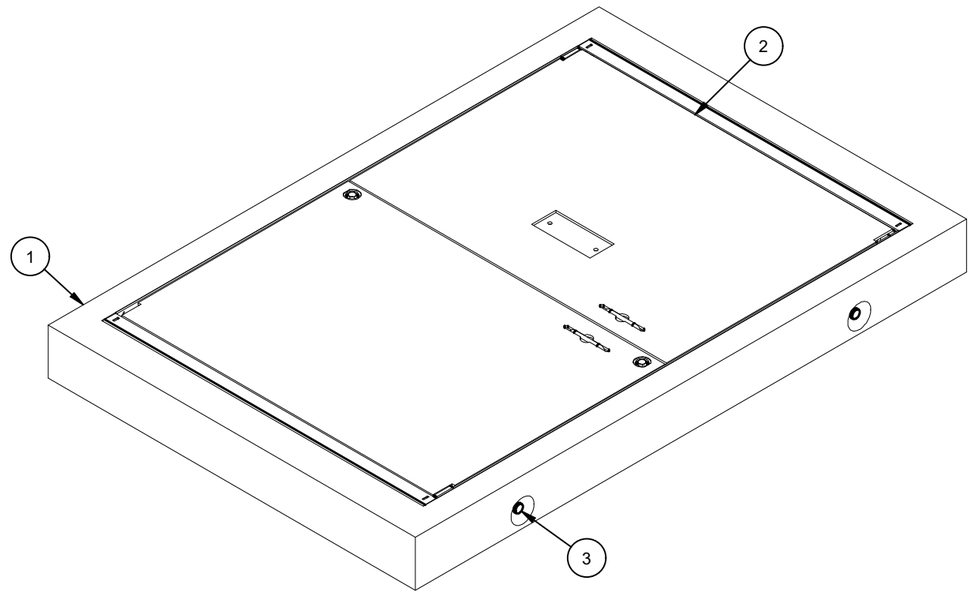

ISOMETRIC VIEW

LIFTING NOTES
■ INSTALLATION: THIS CONCRETE PRODUCT IS DESIGNED TO BE LIFTED AT 5500 PSI WITH 4 LIFT CONNECTIONS EQUALLY LOADED TO 4 LIFTING POINTS AT A MINIMUM 90° SLING ANGLE, MEASURED FROM HORIZONTAL.
■ DEMOLDING: THIS CONCRETE PRODUCT IS DESIGNED TO BE LIFTED AT 2500 PSI WITH 4 LIFT CONNECTIONS EQUALLY LOADED TO 4 LIFTING POINTS AT A MINIMUM 90° SLING ANGLE, MEASURED FROM HORIZONTAL.
*All rigging shall be design by a qualified professional. Loading diagrams show illustrations of possible rigging setups to achieve the required sling angle and load leg equalization. Other valid rigging configurations are possible. A qualified professional must be consulted prior to lifting.

RIGGING DIAGRAMS*

INSTALLATION	E	DEMOLDING	E

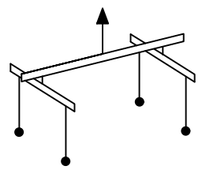

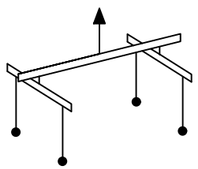

REVISION HISTORY			
REV	DESCRIPTION	DATE	APPROVED
C-1	REPLACED CAST-IN COVER	2/6/2025	

BURY DEPTH:	0.0' - 0.0' to Top
WATER LEVEL:	3.0'
APPROX. WEIGHT:	938.51 Lbs
DESIGN SPEC:	ACI 318,ASTM C857
LOADING SPEC:	A-16 (AASHTO HS20-44)
REINFORCEMENT TYPE:	Rebar
LIFTING TYPE:	Dogbone

JENSEN PRECAST EST. 1968

WWW.JENSENPRECAST.COM

©2025 Jensen Precast- All rights reserved.
All materials appearing as Jensen Precast documents and the like are proprietary work product and are protected under U.S. copyright and other laws.
Unless in conjunction with business conducted with Jensen Precast, any use of Jensen Precast work product without express, written consent is prohibited, and recipient is prohibited from distributing any and all work product to non-approved third parties under penalty of civil action.

DESCRIPTION:	Top Riser 3660x6 Cast-In Cover CASTING LAYOUT	REV:	C-1
PART NUMBER:	100012273	DRAWN BY:	J. Prado
CREATED:	3/20/2024	MODIFIED:	2/6/2025
		SHEET:	1 OF 2

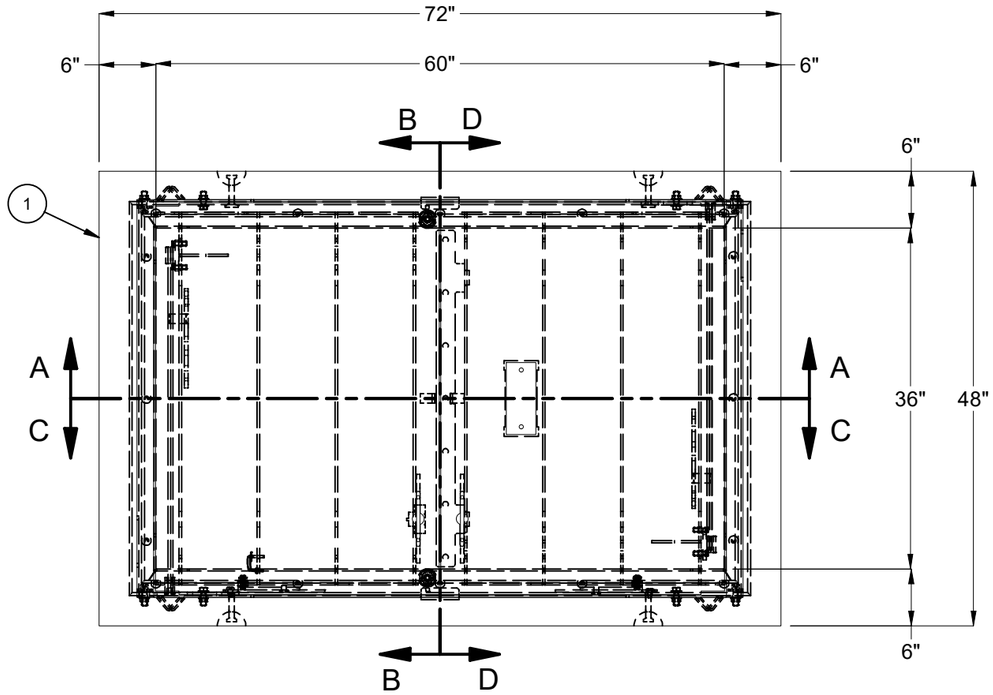

PLAN VIEW

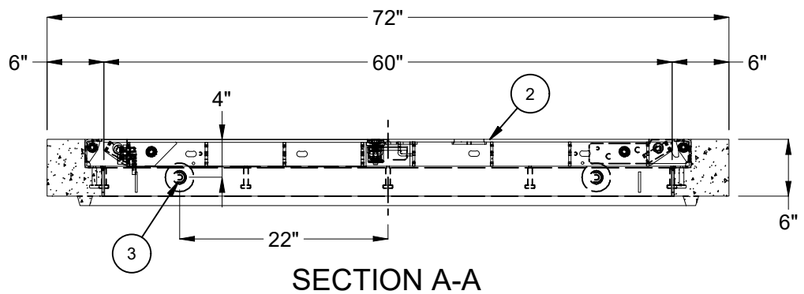

SECTION A-A

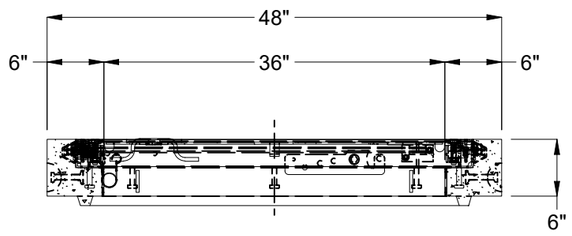

SECTION B-B

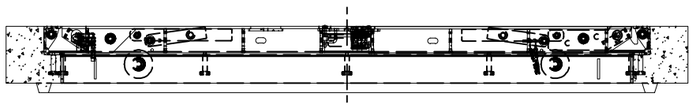

SECTION C-C

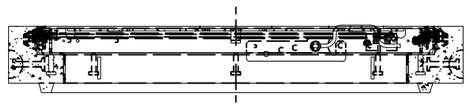

SECTION D-D

BURY DEPTH:	0.0' - 0.0' to Top		
WATER LEVEL:	3.0'	APPROX. WEIGHT:	938.51 Lbs
DESIGN SPEC:	ACI 318,ASTM C857	LOADING SPEC:	A-16 (AASHTO HS20-44)
REINFORCEMENT TYPE:	Rebar	LIFTING TYPE:	Dogbone

JENSEN PRECAST EST. 1968

WWW.JENSENPRECAST.COM

©2025 Jensen Precast- All rights reserved.
All materials appearing as Jensen Precast documents and the like are proprietary work product and are protected under U.S. copyright and other laws.
Unless in conjunction with business conducted with Jensen Precast, any use of Jensen Precast work product without express, written consent is prohibited, and recipient is prohibited from distributing any and all work product to non-approved third parties under penalty of civil action.

DESCRIPTION:	Top Riser 3660x6 Cast-In Cover CASTING DRAWING		REV: C-1
PART NUMBER:	100012273	DRAWN BY:	J. Prado
CREATED:	3/20/2024	MODIFIED:	2/6/2025
			SHEET: 2 OF 2

100012273.idw