NOTES:

■ STANDARDS. AASHTO LRFD BRIDGE DESIGN SPECIFICATIONS, 8TH EDITION, WITH 2022 CALTRANS AMENDMENTS, CITY OF LOS ANGELES BUREAU OF ENGINEERING STANDARD PLAN S-601, LATEST, MANUAL PART H, LADWP P 178, ASTM C-857. STRUCTURAL CALCS FOR BOX: #33541.

■ EACH CONCRETE SECTION SHALL BE MARKED ON THE INSIDE & OUTSIDE WITH "JENSEN", THE DESIGNATION "DWP/FA-CN", AND THE DATE OF THE POUR.

■ EACH CONCRETE SECTION SHALL HAVE CAST-IN ON THE INSIDE "JENSEN", THE YEAR, AND THE DESIGNATION "FA-CN".

BILL OF MATERIALS

ITEM	UNIT QTY	QTY	PART NUMBER	DESCRIPTION
1	34.149 ft^3	34.149 ft^3	100006026	CONCRETE 5500 PSI SIKA CNI & FLY ASH LADWP MIX #30
2	1	4	100002867	ANCHOR DOGBONE P52 2T X 3-3/8" GALV
3	1	4	100003033	PULL IRON OFFSET .875DIA 6 IH X 10.875L X 6.75W 316SS
4	1	2	100044597	Insert Thin Slab Coil 4-Leg 1 x 4" Galv (F53 or Equiv.)
5	1	12	100012720	INSERT PLASTIC W/ BREAK OFF SNAP 0.5IN
6	1	1	100017968	REINFORCING MAT 100017968

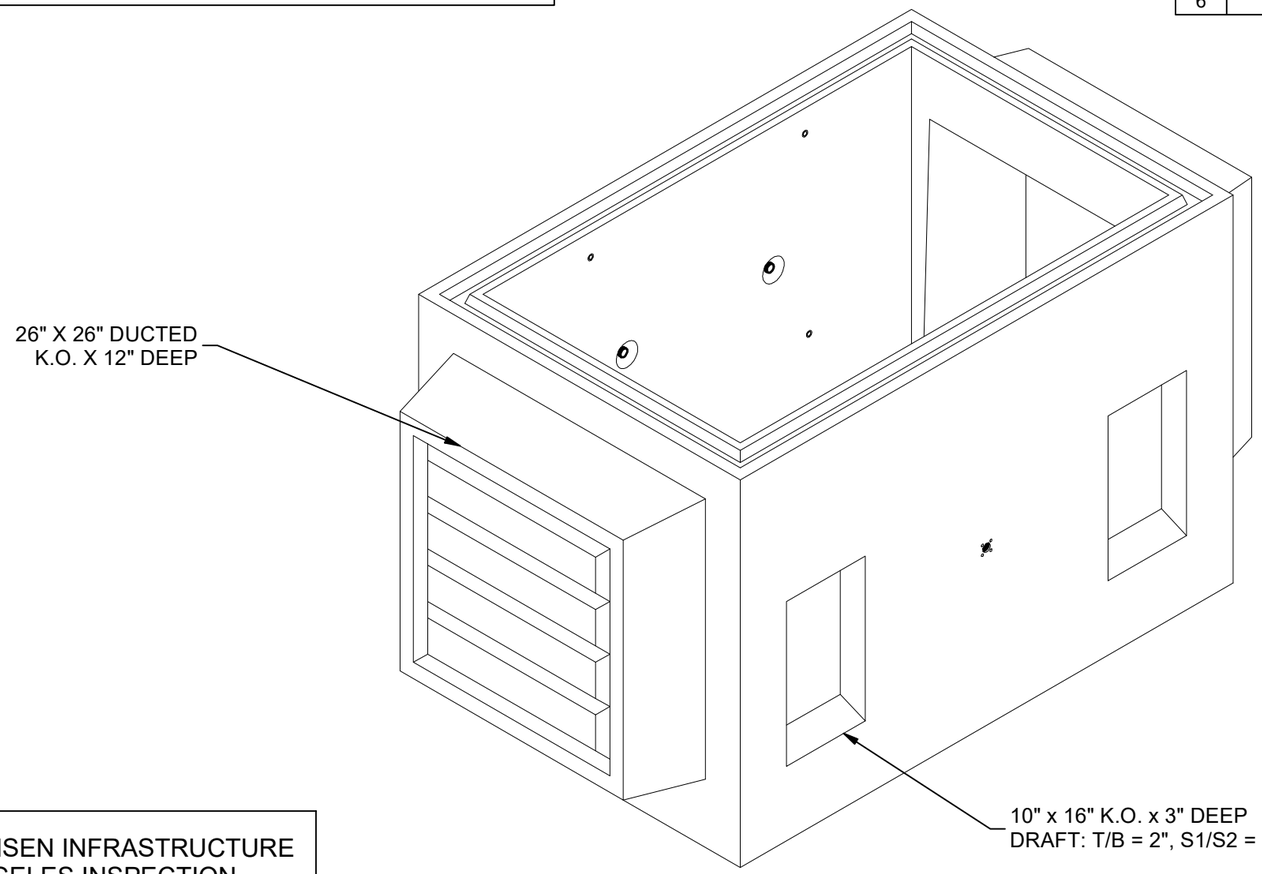

ISO VIEW

STOCKPILE - JENSEN INFRASTRUCTURE
CITY OF LOS ANGELES INSPECTION
REQUIRED WO# C0034604

100012246.idw

LIFTING NOTES

■ INSTALLATION: THIS CONCRETE PRODUCT IS DESIGNED TO BE LIFTED AT 5500 PSI WITH 4 LIFT CONNECTIONS EQUALLY LOADED TO 4 LIFTING POINTS AT A MINIMUM 60° SLING ANGLE, MEASURED FROM HORIZONTAL.

■ DEMOLDING: THIS CONCRETE PRODUCT IS DESIGNED TO BE LIFTED AT 2500 PSI WITH 2 LIFT CONNECTIONS EQUALLY LOADED TO 2 LIFTING POINTS AT A MINIMUM 90° SLING ANGLE, MEASURED FROM HORIZONTAL.

*All rigging shall be design by a qualified professional. Loading diagrams show illustrations of possible rigging setups to achieve the required sling angle and load leg equalization. Other valid rigging configurations are possible. A qualified professional must be consulted prior to lifting.

RIGGING DIAGRAMS*

INSTALLATION **C**

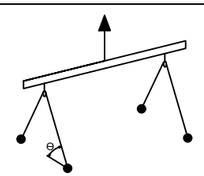

DEMOLDING **G**

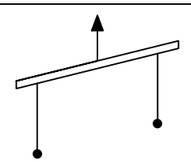

BURY DEPTH:	1.5' - 1.5' to Top		
WATER LEVEL:	3.0'	APPROX. WEIGHT:	5174.78 Lbs
DESIGN SPEC:	AASHTO LRFD,ACI 318,ASTM C857	LOADING SPEC:	AASHTO HL-93
REINFORCEMENT TYPE:	Rebar	LIFTING TYPE:	Dogbone

Infrastructure
JENSEN
WWW.JENSENINFRASTRUCTURE.COM

©2026 Jensen Infrastructure - All rights reserved.
All materials appearing as Jensen Infrastructure documents and the like are proprietary work product and are protected under U.S. copyright and other laws.
Unless in conjunction with business conducted with Jensen Infrastructure , any use of Jensen Infrastructure work product without express, written consent is prohibited, and recipient is prohibited from distributing any and all work product to non-approved third parties under penalty of civil action.
This product shall only be produced in a Jensen Infrastructure facility.

REVISION HISTORY

REV	DESCRIPTION	DATE	APPROVED
B-3-1	UPDATED NOTES	10/8/2026	

DESCRIPTION:	Vault 3660x42 Rect. Bottom Section Knockout Ducted,Sump LADWP E-459 COLA CASTING LAYOUT		REV: B-3-1
PART NUMBER:	100012246	DRAWN BY:	J. Prado
CREATED:	6/27/2023	MODIFIED:	10/8/2026
			SHEET: 1 OF 2

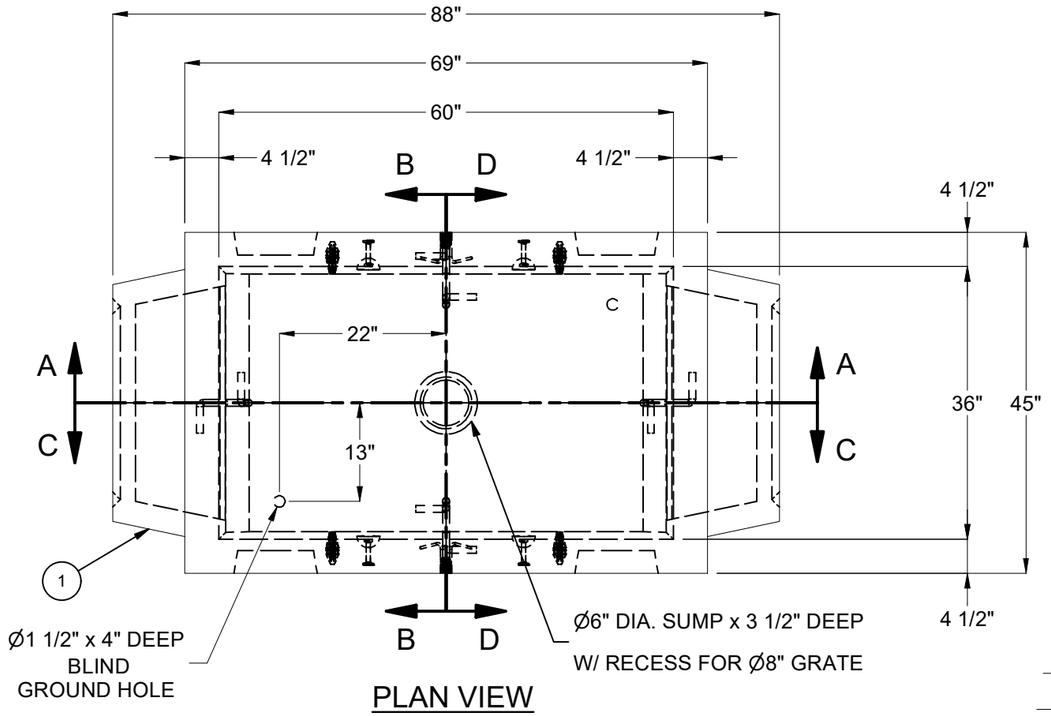

PLAN VIEW

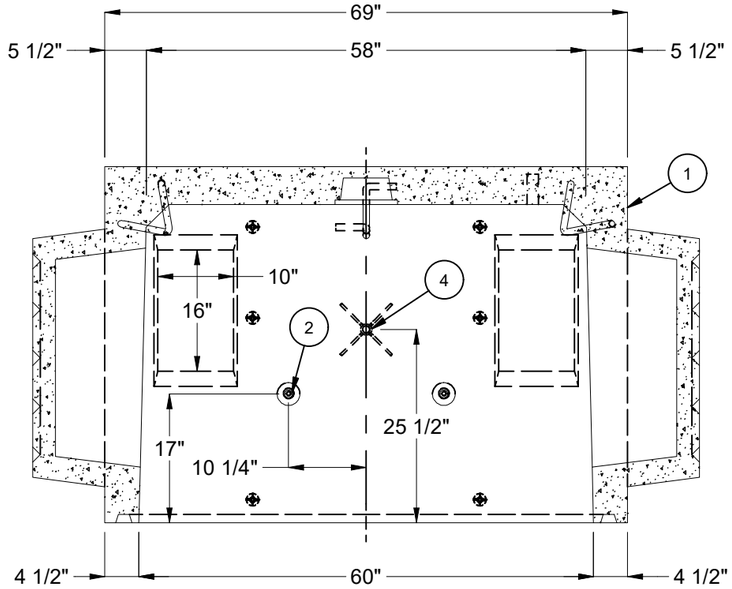

SECTION A-A

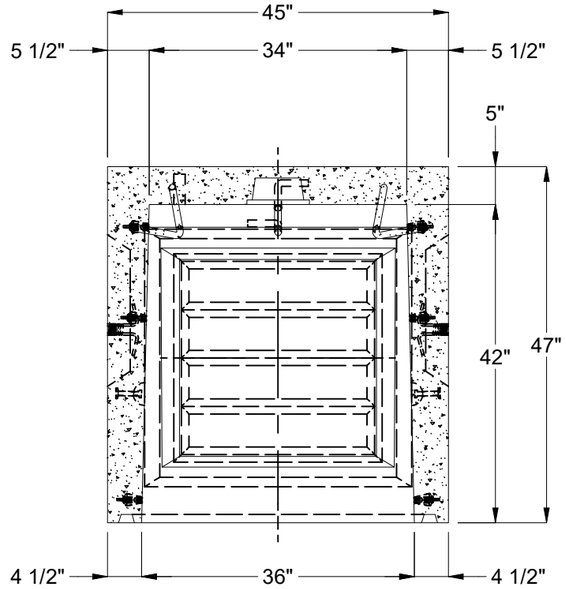

SECTION B-B

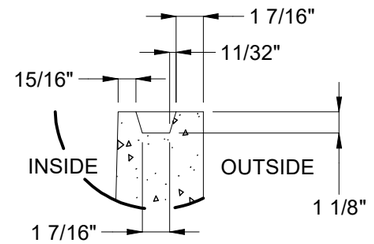

KEY DETAIL

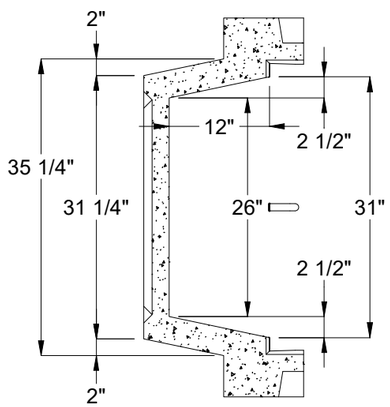

PLAN

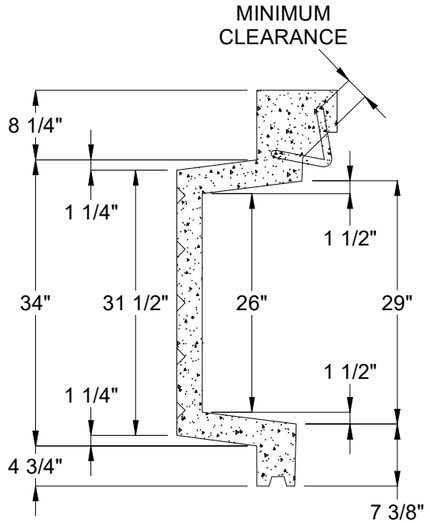

ELEVATION

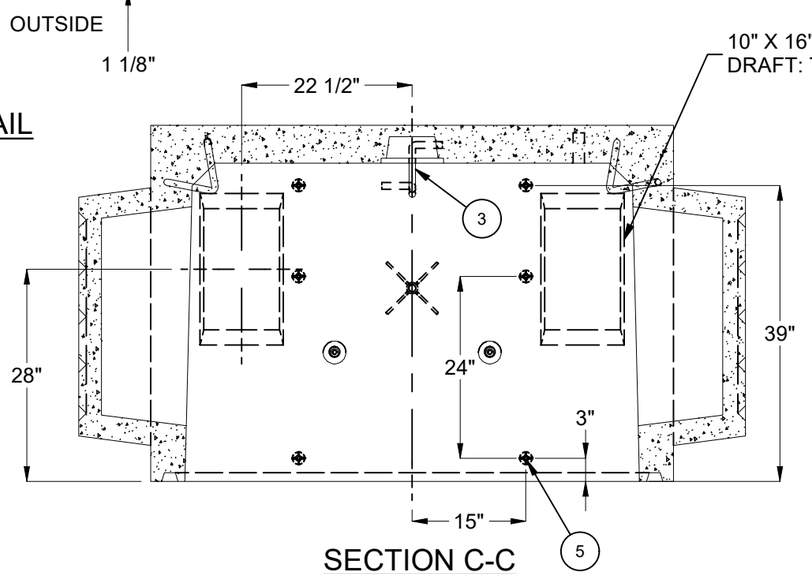

SECTION C-C

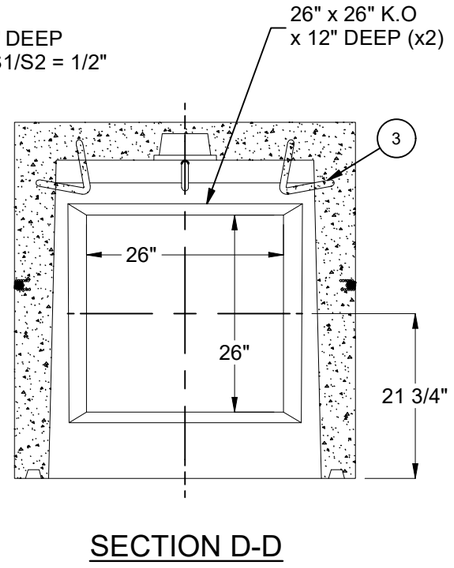

SECTION D-D

BURY DEPTH:	1.5' - 1.5' to Top		
WATER LEVEL:	3.0'	APPROX. WEIGHT:	5174.78 Lbs
DESIGN SPEC:	AASHTO LRFD,ACI 318,ASTM C857	LOADING SPEC:	AASHTO HL-93
REINFORCEMENT TYPE:	Rebar	LIFTING TYPE:	Dogbone

Infrastructure
JENSEN
WWW.JENSENINFRASTRUCTURE.COM

©2026 Jensen Infrastructure - All rights reserved.
All materials appearing as Jensen Infrastructure documents and the like are proprietary work product and are protected under U.S. copyright and other laws.
Unless in conjunction with business conducted with Jensen Infrastructure , any use of Jensen Infrastructure work product without express, written consent is prohibited, and recipient is prohibited from distributing any and all work product to non-approved third parties under penalty of civil action.
This product shall only be produced in a Jensen Infrastructure facility.

DESCRIPTION:	Vault 3660x42 Rect. Bottom Section Knockout Ducted,Sump LADWP E-459 COLA CASTING DRAWING		REV: B-3-1
PART NUMBER:	100012246	DRAWN BY:	J. Prado
CREATED:	6/27/2023	MODIFIED:	10/8/2026
			SHEET: 2 OF 2

100012246.idw