NOTES
■ DESIGNED IN ACCORDANCE WITH C857LOADING USING 5500 PSI COMPRESSIVE STRENGTH CONCRETE AND 60,000 PSI YIELD STRENGTH ASTM A-706 STEEL REINFORCEMENT PER CALCS. #30212.
■ ALL PARTS TO BE STENCILED: MFG DATE / JOB NUMBER / PRODUCT ID / WEIGHT.

BILL OF MATERIALS

ITEM	UNIT QTY	QTY	PART NUMBER	DESCRIPTION
1	3.567 ft^3	3.567 ft^3	100005993	CONCRETE 5500 PSI DRYCAST MIX
2	1	3	100002867	ANCHOR DOGBONE P52 2T X 3-3/8" GALV
3	1	4	100002765	Insert Ferrule Loop 0.5 x 2.75" Zinc (F42 or Equiv.)
4	1	1	100017853	REINFORCING MAT 100017853

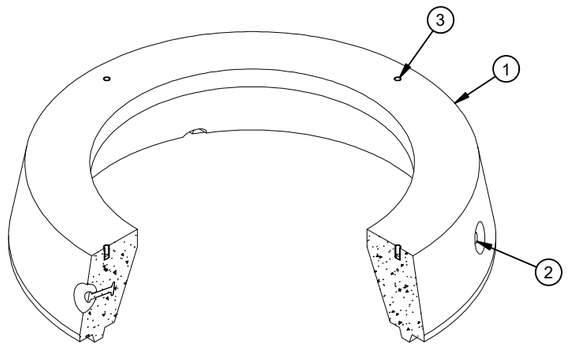

ISOMETRIC VIEW

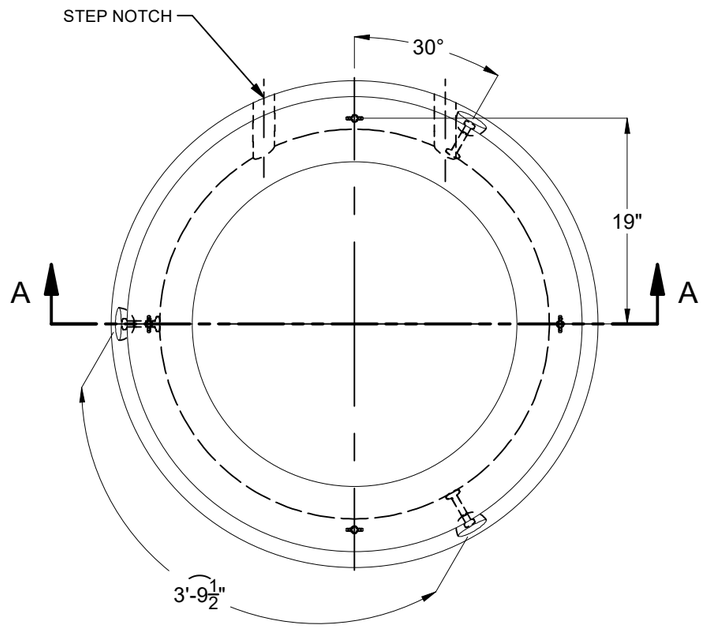

PLAN VIEW

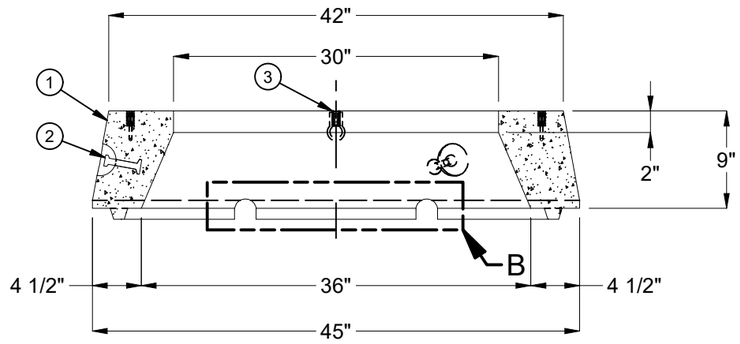

SECTION A-A

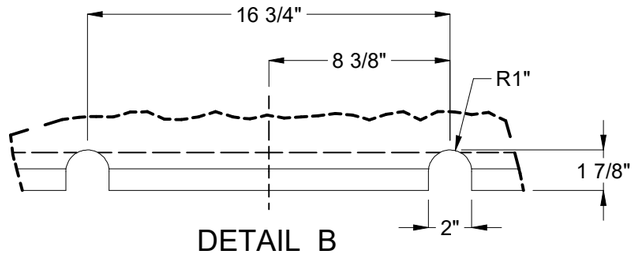

DETAIL B
(NOTCHES FOR KNURLED STEP)

LIFTING NOTES
■ THIS CONCRETE PRODUCT IS DESIGNED TO BE LIFTED AT 5,500 PSI WITH 3 LIFT CONNECTIONS EQUALLY LOADED TO 3 LIFTING POINTS AT A MINIMUM 90° SLING ANGLE, MEASURED FROM HORIZONTAL.

BURY DEPTH:	0.0' - 0.0' to Top		
WATER LEVEL:	3.0'	APPROX. WEIGHT:	537.69 Lbs
DESIGN SPEC:	ASTM C478,ASTM C857	LOADING SPEC:	A-16 (AASHTO HS20-44)
REINFORCEMENT TYPE:	Rebar	LIFTING TYPE:	Dogbone

JENSEN PRECAST EST. 1968

WWW.JENSENPRECAST.COM

©2024 Jensen Precast- All rights reserved.
All materials appearing as Jensen Precast documents and the like are proprietary work product and are protected under U.S. copyright and other laws.
Unless in conjunction with business conducted with Jensen Precast, any use of Jensen Precast work product without express, written consent is prohibited, and recipient is prohibited from distributing any and all work product to non-approved third parties under penalty of civil action.

REVISION HISTORY			
REV	DESCRIPTION	DATE	APPROVED
B	INITIAL RELEASE INVENTOR	3/18/2024	

DESCRIPTION:	Grade Ring D3036x9 LADWP CASTING LAYOUT		REV: B-1
PART NUMBER:	100012236	DRAWN BY:	J. Prado
CREATED:	3/14/2024	MODIFIED:	3/18/2024
			SHEET: 1 OF 1

100012236.idw