NOTES
■ STRUCTURES TO BE STENCILED, "JENSEN PRECAST", WITH "TIME" AND "DATE OF POUR", AND SDGE STOCK NUMBER ON EXTERIOR AND INTERIOR WALLS.

CROSS REFERENCE		
JENSEN PART No.	SHORT DESCRIPTION	SDGE STOCK No.
100012221	3314 12" Top section with frame	S336210

BILL OF MATERIALS

ITEM	UNIT QTY	QTY	PART NUMBER	DESCRIPTION
1	6.053 ft^3	6.053 ft^3	100037806	CONCRETE 6000 PSI WETCAST #87 SCC W/ FLY ASH 5%-6% AIR SDGE FONT
2	1	1	100006706	FAS-4878-CD4-G-OH02
3	1	4	100002867	ANCHOR DOGBONE P52 2T X 3-3/8" GALV
4	1	8	100008114	INSERT THREADED METAL 1/2-13 UNC 1-1/2 IN OPEN
5	1	1	300125738	REINFORCING MAT 300125738

100012221.idw

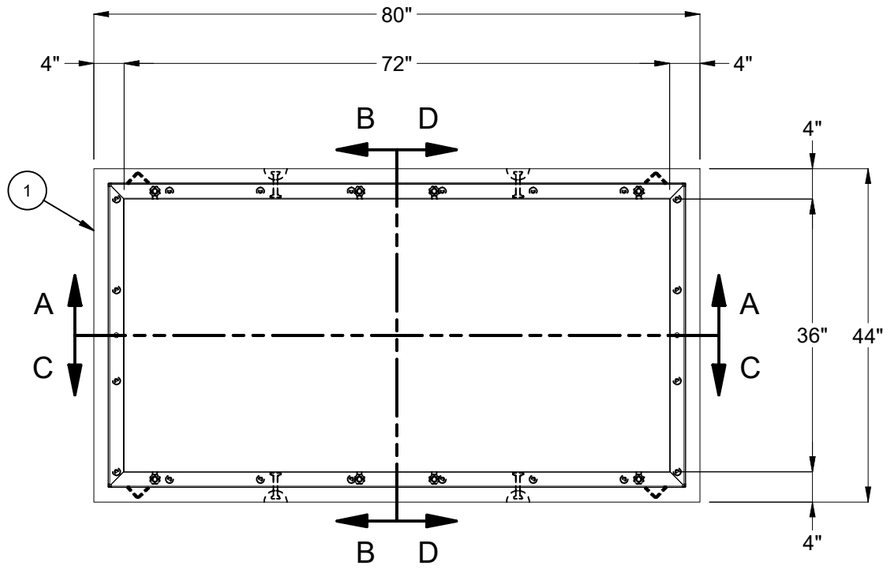

PLAN VIEW

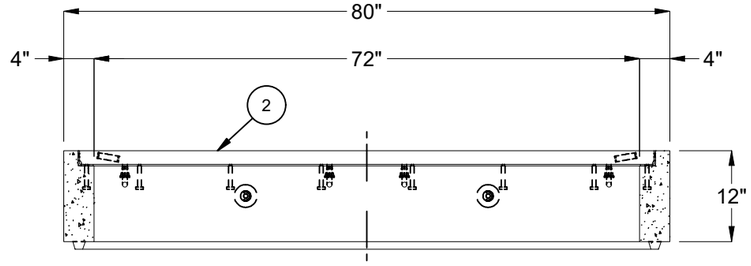

SECTION A-A

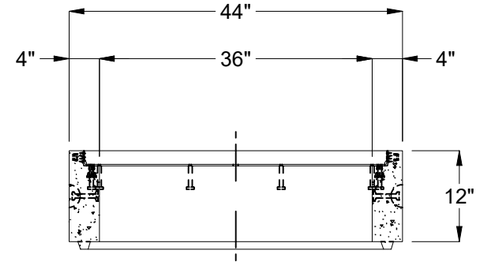

SECTION B-B

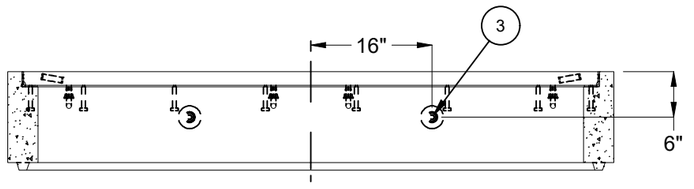

SECTION C-C

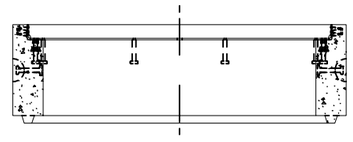

SECTION D-D

LIFTING NOTES
■ DEMOLDING: THIS CONCRETE PRODUCT IS DESIGNED TO BE LIFTED AT 2,500 PSI WITH 4 LIFT CONNECTIONS EQUALLY LOADED TO 4 LIFTING POINTS AT A MINIMUM 60° SLING ANGLE, MEASURED FROM HORIZONTAL.
■ INSTALLATION: THIS CONCRETE PRODUCT IS DESIGNED TO BE LIFTED AT 5,500 PSI WITH 4 LIFT CONNECTIONS EQUALLY LOADED TO 4 LIFTING POINTS AT A MINIMUM 60° SLING ANGLE, MEASURED FROM HORIZONTAL.

REVISION HISTORY			
REV	DESCRIPTION	DATE	APPROVED
B	INITIAL RELEASE INVENTOR	11/13/2023	

BURY DEPTH:	0.0' - 0.0' to Top		
WATER LEVEL:	3.0'	APPROX. WEIGHT:	961.57 Lbs
DESIGN SPEC:	ACI 318,ASTM C857	LOADING SPEC:	A-16 (AASHTO HS20-44)
REINFORCEMENT TYPE:	Rebar	LIFTING TYPE:	Dogbone

JENSEN PRECAST EST. 1968

WWW.JENSENPRECAST.COM

©2023 Jensen Precast- All rights reserved.
All materials appearing as Jensen Precast documents and the like are proprietary work product and are protected under U.S. copyright and other laws.
Unless in conjunction with business conducted with Jensen Precast, any use of Jensen Precast work product without express, written consent is prohibited, and recipient is prohibited from distributing any and all work product to non-approved third parties under penalty of civil action.

DESCRIPTION:	Top Riser 3672x12 Cast-In Frame SDGE 3314 CASTING LAYOUT		REV: B-2
PART NUMBER:	100012221	DRAWN BY:	J. Prado
CREATED:	11/10/2023	MODIFIED:	11/13/2023
			SHEET: 1 OF 2

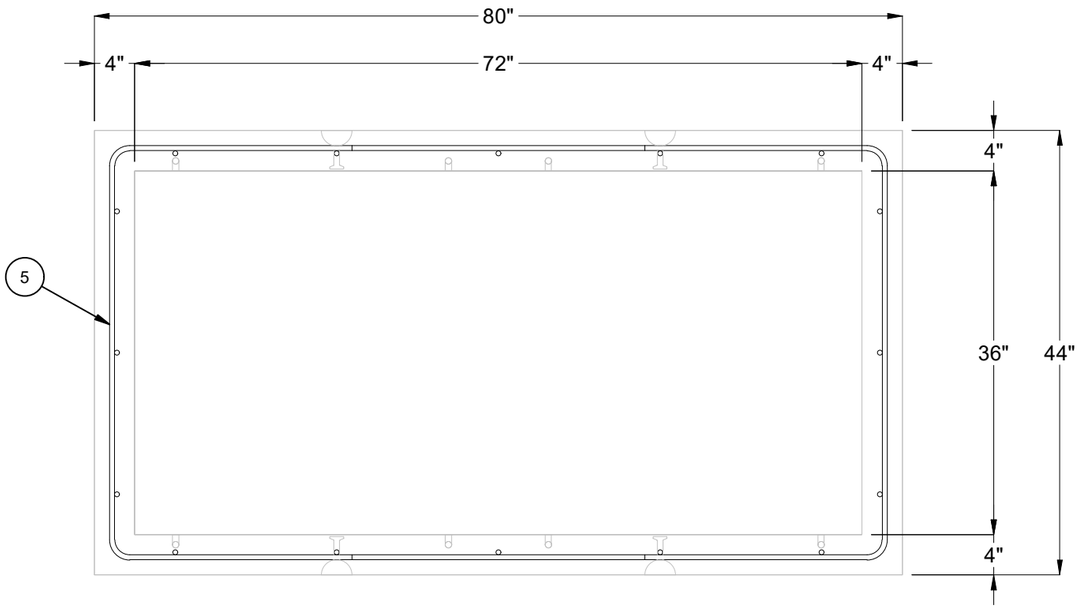

PLAN VIEW

REINFORCING REVIEW NOTES
■ THE MINIMUM COVER OVER REINFORCING STEEL SHALL BE AS FOLLOWS:
(A) 1 1/2" FOR INSIDE & OUTSIDE FACE OF WALLS.
(B) 1 1/2" FOR INSIDE & OUTSIDE FACE OF ROOF SLABS.
(C) 3/4" FOR SHEAR KEYS.
(D) UNLESS OTHERWISE SHOWN.
TOLERANCES:
1. DIMENSIONS AFFECTING COVERAGE ...± 1/4"-0"
2. DIMENSIONS IN PLANE OF CAGE AND NOT AFFECTING ABOVE ...± 1".

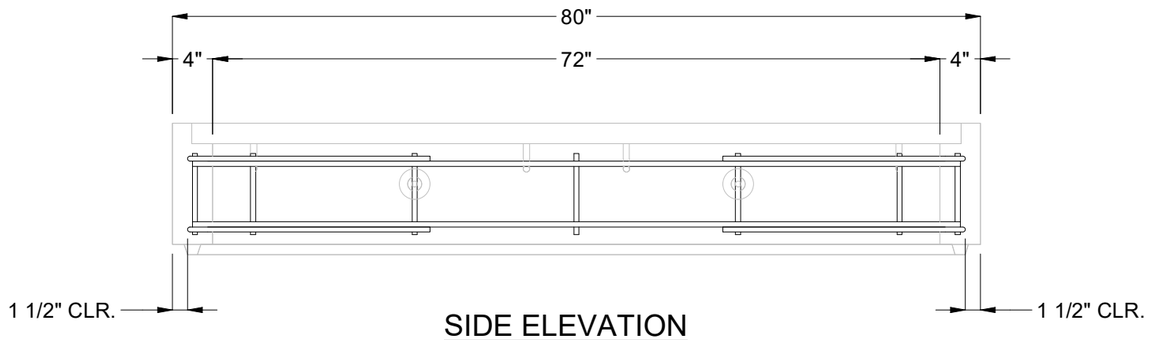

SIDE ELEVATION

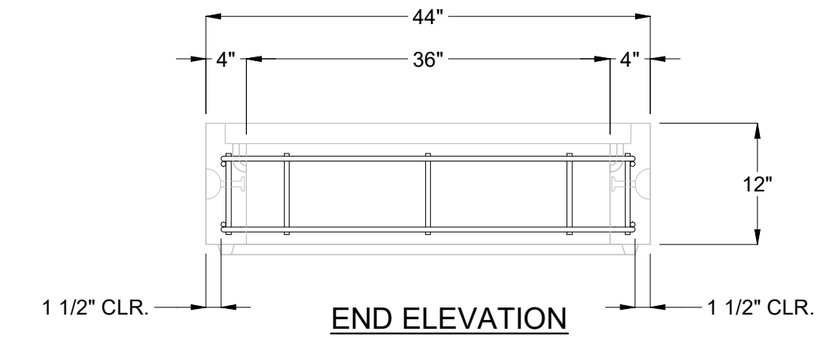

END ELEVATION

BURY DEPTH:	0.0' - 0.0' to Top		
WATER LEVEL:	3.0'	APPROX. WEIGHT:	961.57 Lbs
DESIGN SPEC:	ACI 318,ASTM C857	LOADING SPEC:	A-16 (AASHTO HS20-44)
REINFORCEMENT TYPE:	Rebar	LIFTING TYPE:	Dogbone

JENSEN PRECAST EST. 1968

WWW.JENSENPRECAST.COM

©2023 Jensen Precast- All rights reserved.
All materials appearing as Jensen Precast documents and the like are proprietary work product and are protected under U.S. copyright and other laws.
Unless in conjunction with business conducted with Jensen Precast, any use of Jensen Precast work product without express, written consent is prohibited, and recipient is prohibited from distributing any and all work product to non-approved third parties under penalty of civil action.

DESCRIPTION:	Top Riser 3672x12 Cast-In Frame SDGE 3314 REINFORCEMENT REVIEW		REV: B-2
PART NUMBER:	100012221	DRAWN BY:	J. Prado
CREATED:	11/10/2023	MODIFIED:	11/13/2023
			SHEET: 2 OF 2

100012221.idw