NOTES
■ ALL PARTS TO BE STENCILED: MFG DATE / JOB NUMBER / PRODUCT ID / WEIGHT.

BILL OF MATERIALS

ITEM	UNIT QTY	QTY	PART NUMBER	DESCRIPTION
1	30.058 ft^3	30.058 ft^3	100024079	CONCRETE #19 MOD SCC
2	1	2	100003026	PULL IRON OFFSET .875DIA 6 IH X 10.875L X 6.75W GALV
4	1	4	100002867	ANCHOR DOGBONE P52 2T X 3-3/8" GALV
7	1	2	100044597	Insert Thin Slab Coil 4-Leg 1 x 4" Galv (F53 or Equiv.)
5	1	20	100012720	INSERT PLASTIC W/ BREAK OFF SNAP 0.5IN
3	1	1	100008132	RFI PLASTIC TAG IDENCIA
6	1	1	100017942	REINFORCING MAT 100017942

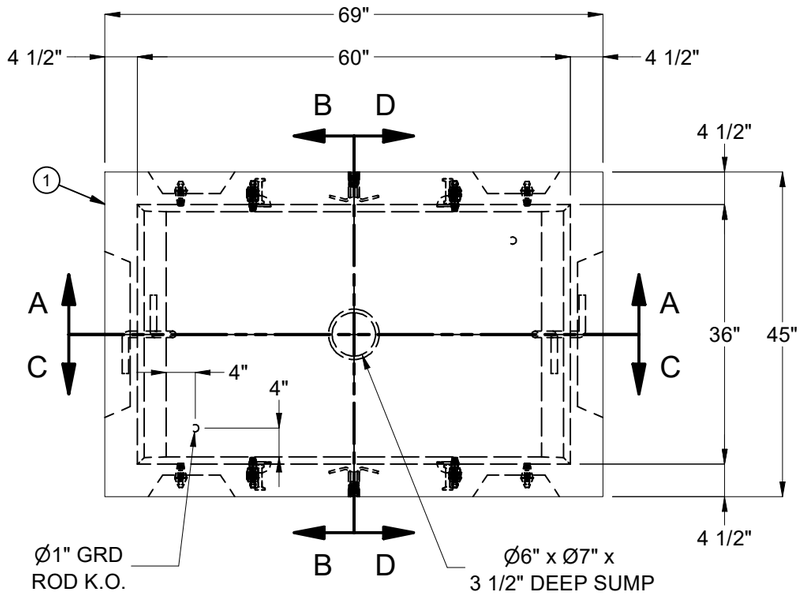

PLAN VIEW

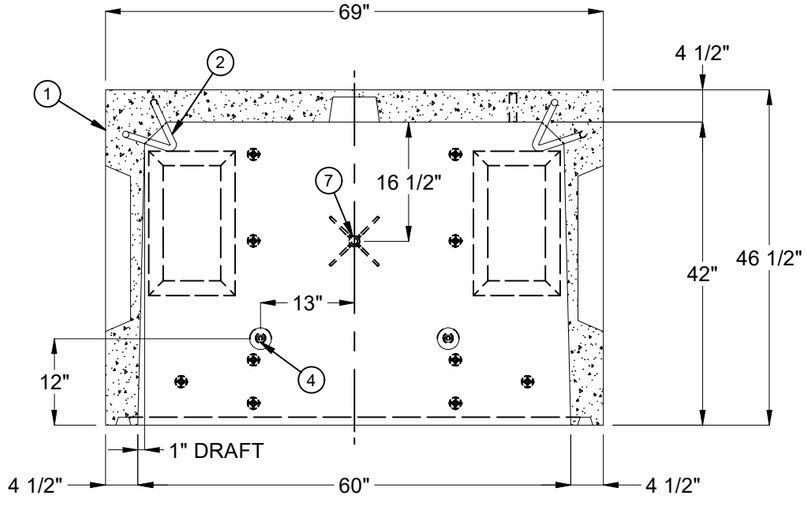

SECTION A-A

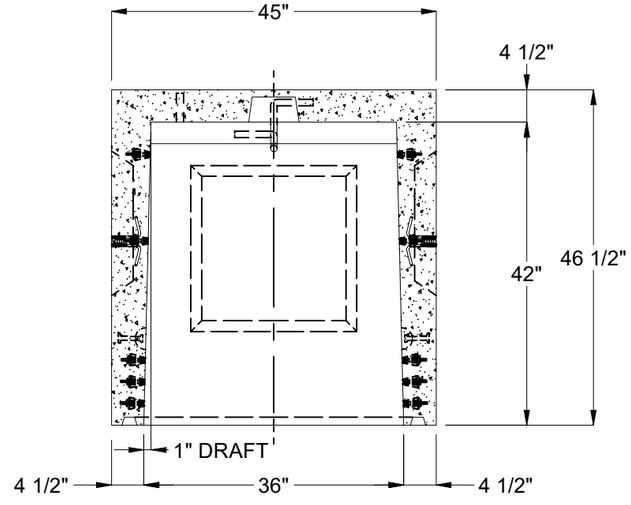

SECTION B-B

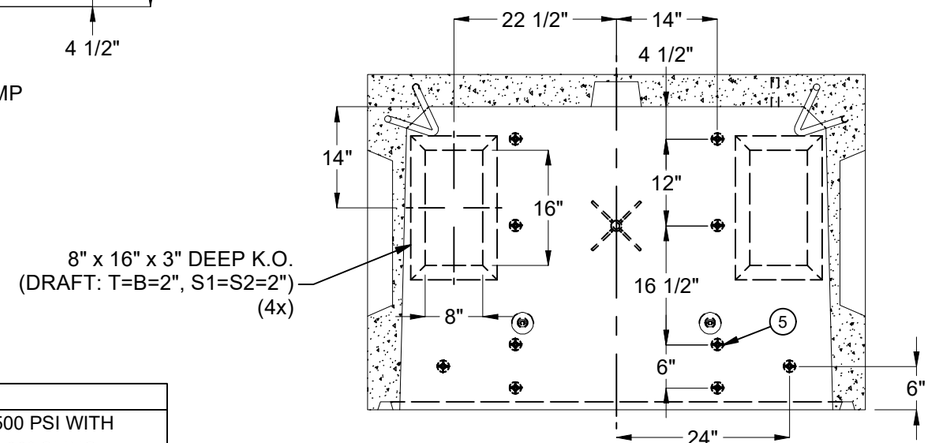

SECTION C-C

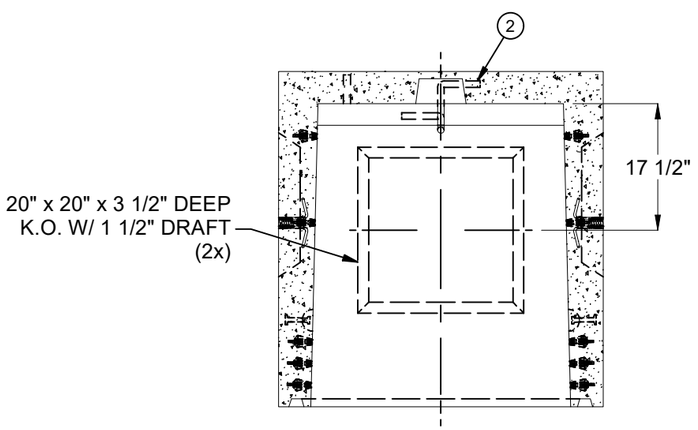

SECTION D-D

LIFTING NOTES
■ DEMOLDING: THIS CONCRETE PRODUCT IS DESIGNED TO BE LIFTED AT 2,500 PSI WITH 2 LIFT CONNECTIONS EQUALLY LOADED TO 2 LIFTING POINTS AT A MINIMUM 90° SLING ANGLE, MEASURED FROM HORIZONTAL.
■ INSTALLATION: THIS CONCRETE PRODUCT IS DESIGNED TO BE LIFTED AT 5,500 PSI WITH 4 LIFT CONNECTIONS EQUALLY LOADED TO 4 LIFTING POINTS AT A MINIMUM 60° SLING ANGLE, MEASURED FROM HORIZONTAL.

REVISION HISTORY			
REV	DESCRIPTION	DATE	APPROVED
B-1	RELEASE IN INVENTOR	7/1/2021	

BURY DEPTH:	0.5' - 0.5' to Top		
WATER LEVEL:	3.0'	WEIGHT:	4549.45 Lbs
DESIGN SPEC:	ASTM C857,ACI 318	LOADING SPEC:	A-16 (AASHTO HS20-44)
REINFORCEMENT TYPE:	Rebar	LIFTING TYPE:	Dogbone

JENSEN PRECAST EST. 1968

WWW.JENSENPRECAST.COM

©2019 Jensen Precast- All rights reserved.
All materials appearing as Jensen Precast documents and the like are proprietary work product and are protected under U.S. copyright and other laws.
Unless in conjunction with business conducted with Jensen Precast, any use of Jensen Precast work product without express, written consent is prohibited, and recipient is prohibited from distributing any and all work product to non-approved third parties under penalty of civil action.

DESCRIPTION:	Vault 3660x42 Rect. Bottom Section Knockout Sump CASTING LAYOUT		REV: B-1
PART NUMBER:	100012214	DRAWN BY:	J. Prado
CREATED:	6/30/2021	MODIFIED:	7/1/2021
			SHEET: 1 OF 1

100012214.idw