DESIGN NOTES
■ DESIGNED IN ACCORDANCE WITH AASHTO HS20-44 TRAFFIC BRIDGE LOADING USING 5,500 PSI COMPRESSIVE STRENGTH CONCRETE AND 60,000 PSI YIELD STRENGTH ASTM A-706 STEEL REINFORCEMENT PER CALCS. #33256.
■ "GRD" STENCILED IN RED LETTERS (1 1/2" MIN. - 2" MAX.)
■ ALL PARTS TO BE STENCILED: MFG DATE / JOB NUMBER / PRODUCT ID / WEIGHT.

BILL OF MATERIALS

ITEM	UNIT QTY	QTY	PART NUMBER	DESCRIPTION
1	75.348 ft^3	75.348 ft^3	100024079	CONCRETE #19 SCC
2	1	4	100002877	ANCHOR DOGBONE P52 4T X 9-1/2" GALV
3	1	4	100002874	ANCHOR DOGBONE P52 4T X 4-3/4" GALV
4	1	24	100003019	TERMINATOR DUCT WITH SEAL 6IN T6000
5	1	2	100005912	PULL IRON OFFSET .875DIA 3.375 IH X 12.125L X 6.5W GALV
6	1	4	100003026	PULL IRON OFFSET .875DIA 6 IH X 10.875L X 6.75W GALV
7	1	1	100005933	GROUND INSERTS BOTTLE ROCKET BRASS 1/2X16 STEEL ROD 12G69
8	1	1	100017930	REINFORCING MAT 100017930

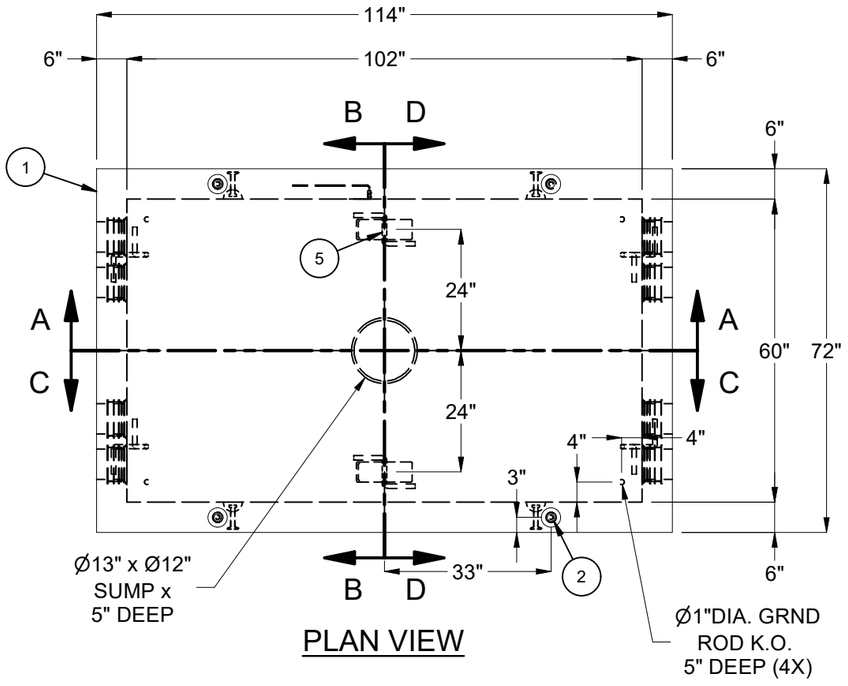

PLAN VIEW

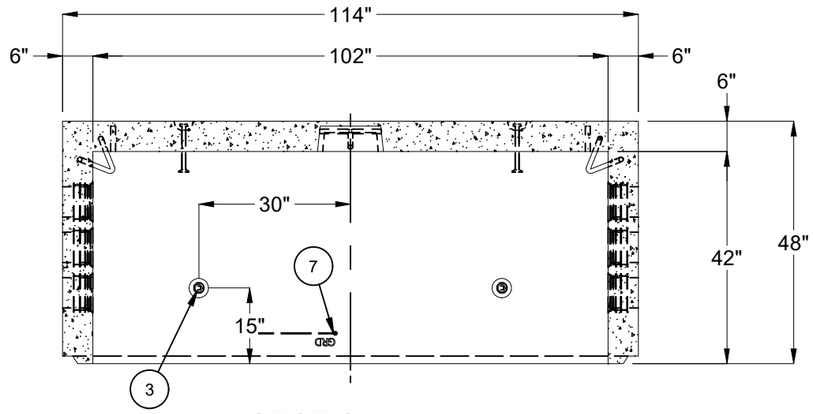

SECTION A-A

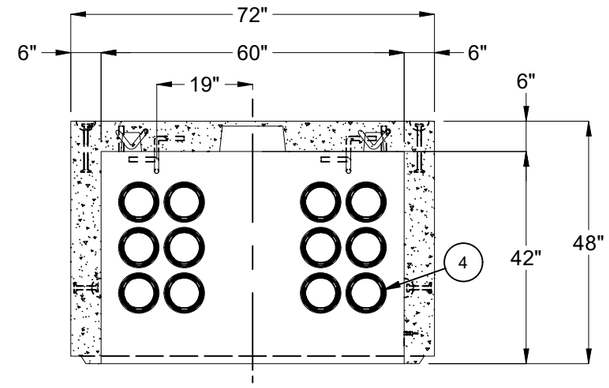

SECTION B-B

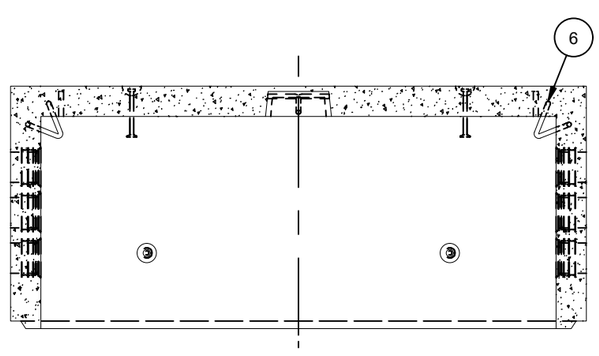

SECTION C-C

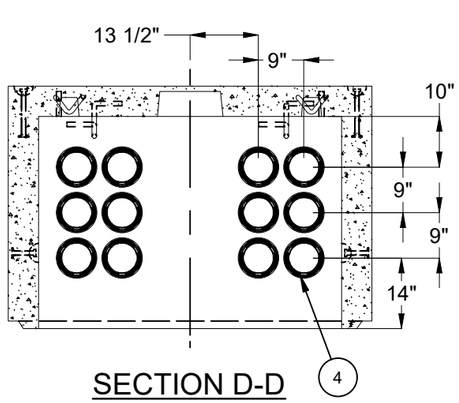

SECTION D-D

LIFTING NOTES
■ INSTALLATION: THIS CONCRETE PRODUCT IS DESIGNED TO BE LIFTED AT 5500 PSI WITH 4 LIFT CONNECTIONS EQUALLY LOADED TO 4 LIFTING POINTS AT A MINIMUM 60° SLING ANGLE, MEASURED FROM HORIZONTAL.
■ DEMOLDING: THIS CONCRETE PRODUCT IS DESIGNED TO BE LIFTED AT 2500 PSI WITH 4 LIFT CONNECTIONS EQUALLY LOADED TO 4 LIFTING POINTS AT A MINIMUM 90° SLING ANGLE, MEASURED FROM HORIZONTAL.
*All rigging shall be design by a qualified professional. Loading diagrams show illustrations of possible rigging setups to achieve the required sling angle and load leg equalization. Other valid rigging configurations are possible. A qualified professional must be consulted prior to lifting.

RIGGING DIAGRAMS*

INSTALLATION	C	DEMOLDING	E

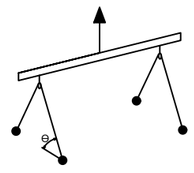

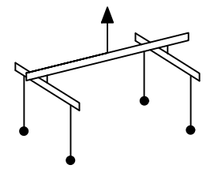

BURY DEPTH:	0.5' - 3.7' to Top		
WATER LEVEL:	3.0'	APPROX. WEIGHT:	11350.43 Lbs
DESIGN SPEC:	ACI 318,ASTM C857	LOADING SPEC:	A-16 (AASHTO HS20-44)
REINFORCEMENT TYPE:	Rebar	LIFTING TYPE:	Dogbone

JENSEN PRECAST EST. 1968

WWW.JENSENPRECAST.COM

©2024 Jensen Precast- All rights reserved.
All materials appearing as Jensen Precast documents and the like are proprietary work product and are protected under U.S. copyright and other laws.
Unless in conjunction with business conducted with Jensen Precast, any use of Jensen Precast work product without express, written consent is prohibited, and recipient is prohibited from distributing any and all work product to non-approved third parties under penalty of civil action.

REVISION HISTORY

REV	DESCRIPTION	DATE	APPROVED
B-1	REMOVED TAG	6/27/2024	

DESCRIPTION:	Vault 60102x42 Rect. Bottom Section Terminators Sump IID CASTING DRAWING		REV: B-1
PART NUMBER:	100012202	DRAWN BY:	J. Prado
CREATED:	1/20/2021	MODIFIED:	6/27/2024
			SHEET: 1 OF 1

100012202.idw