NOTES:

■ STANDARDS. AASHTO LRFD BRIDGE DESIGN SPECIFICATIONS, 8TH EDITION, WITH 2022 CALTRANS AMENDMENTS, CITY OF LOS ANGELES BUREAU OF ENGINEERING STANDARD PLAN S-601, LATEST, MANUAL PART H, LADWP P 178, ASTM C-857. STRUCTURAL CALCS FOR BOX: #35062.

■ MATERIAL. CONCRETE, F'c=5,500 PSI. MIX TO INCLUDE FLY ASH AND DCI. REINFORCEMENT PER ASTM A-706, Fy=60,000.

■ LOADS. VERTICAL LIVE LOAD: AASHTO HL-93. LIVE LOAD SURCHARGE: PER LA BOE PART H, FIGURE H 374.2A. MINIMUM 80 PSF (TO BOTTOM OF VAULT) OR LADWP P 178 (104 PSF). SOIL LATERAL LOADS: 40 PCF (DRY), 81 PCF (SATURATED), SATURATED SOIL CONDITIONS 3'-0" BELOW GRADE. SOIL BEARING CAPACITY = 1,500 PSF. DESIGN SOIL DENSITY IS 120 PCF.

■ LOADS NOT INCLUDED. DESIGN DOES NOT INCLUDE COOPER E-80 RAILROAD LOADS OR LATERAL OR SURCHARGE LOADS THAT ARE PRODUCED BY FOOTING OR FOUNDATIONS ADJACENT TO THE STRUCTURE. THIS SUBSTRUCTURE SHALL BE KEPT AT LEAST IN A 1:1 RATIO AWAY FROM ALL FOOTINGS AND FOUNDATIONS, UNLESS THE ENGINEER OF RECORD APPROVES IN WRITING.

■ INSTALLATION. VAULT TO BE PLACED ON A MIN. 6" BASE OF CRUSHER RUN FOR EASE OF INSTALLATION AND EVEN LOAD DISTRIBUTION. BASE MATERIAL IN ACCORDANCE WITH SECTION 200-2 OF THE SSPWC (GREEN BOOK).

■ INSTALLATION LIMITS. TOP OF VAULT SHALL BE AT GRADE.

■ EACH CONCRETE SECTION SHALL BE MARKED ON THE INSIDE & OUTSIDE WITH "JENSEN PRECAST", THE DESIGNATION "DWP/FA-CN", AND THE DATE OF THE POUR.

■ EACH CONCRETE SECTION SHALL HAVE CAST-IN ON THE INSIDE "JENSEN", THE YEAR, AND THE DESIGNATION "FA-CN".

■ EACH PIECE TO BE STENCILIED WITH ITS PART NO.

■ MINIMUM EXCAVATION SIZE: 4'-9" X 8'-4" X DEPTH REQ'D.

■ VAULT SHALL HAVE FABRICATION AND SITE INSPECTION BY LA CITY INSPECTOR IN ACCORDANCE WITH SECTION 2-11 & 4-1.3 OF THE LATEST LA BOE "BROWN BOOK"

■ ADDITIONAL SUBMITTAL, PERMIT AND CONSTRUCTION PLAN REVIEW WILL BE REQUIRED FOR EACH PROJECT LOCATION. SUBMIT TO CITY ENGINEERS FOR APPROVAL PRIOR TO START OF ANY CONSTRUCTION.

■ ALL INSTALLATIONS SHALL COMPLY WITH ALL OTHER LOCAL GOVERNING CODES AND REGULATION INCLUDING CALIFORNIA PUBLIC UTILITIES COMMISION REGULATIONS.

■ DESIGNED FOR 90 PCF LATERAL SOIL PRESSURE PER CUSTOMER'S SPEC.

CUSTOMER TO VERIFY QTY, SIZE AND LOCATION OF OPENINGS. INFO NEEDED BY JENSEN PRIOR TO RELEASE FOR PRODUCTION. SECTION VIEWS ARE SHOWN FROM INSIDE THE STRUCTURE.

BILL OF MATERIALS

ITEM	UNIT QTY	QTY	PART NUMBER	DESCRIPTION	MASS (lb)
1	1	1	100012324	Vault 3660x42 Rect. Bottom Section Knockout Ducted,Sump LADWP E-459	5175
2	1	2	100012177	Riser 3660x12	1004
3	1	1	100012197	Top Riser 3660x6 Cast-In Frame LADWP E-459	399
4	1	1	100006523	DOOR BOT 3660 DI INC TRX GALV	194
5	1	1	100006544	DOOR TOP 3660 DI INC TRX GALV TSRGV	187
6	1	2	100006748	NAME PLATE SS - LADWP-E	
7	1	8	100004349	BOLT HEX 1/2-13 UNC 2.5 304SS	
8	1	2	100007650	NAME PLATE HARDWARE KIT	
9	1.000 ul	1.000 ul	100005749	SEALANT JOINT BUTYL RUBBER ASTM C-990 AND M198 CS-102 1IN EQUIV X14.5FT PER BOX 118FT	

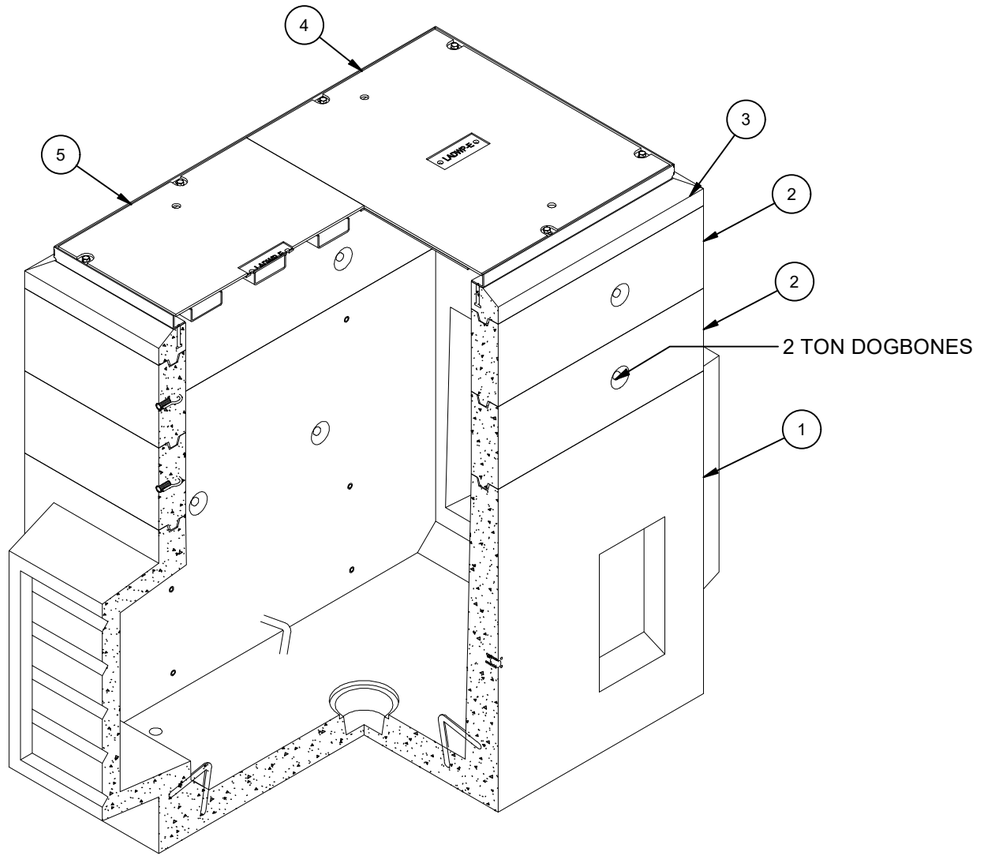

ISO VIEW

LIFTING NOTES

■ FIELD INSTALLATION: PLANT DEMOLDING: MINIMUM HANDLING CONCRETE STRENGTH F'c = 5500 PSI RIGGING EQUALIZER REQUIRED TO EQUALIZE LOAD TO 4 LIFTING POINTS WITH A SLING ANGLE BETWEEN 60° AND 90°

BURY DEPTH:	0.0' - 0.0' to Top		
WATER LEVEL:	3.0'	APPROX. WEIGHT:	7968.31 Lbs
DESIGN SPEC:	AASHTO LRFD,ASTM C857	LOADING SPEC:	AASHTO HL-93
AGENCY:	LADWP	AGENCY SPEC:	E-459

JENSEN PRECAST EST. 1968

WWW.JENSENPRECAST.COM

©2024 Jensen Precast- All rights reserved.
All materials appearing as Jensen Precast documents and the like are proprietary work product and are protected under U.S. copyright and other laws.
Unless in conjunction with business conducted with Jensen Precast, any use of Jensen Precast work product without express, written consent is prohibited, and recipient is prohibited from distributing any and all work product to non-approved third parties under penalty of civil action.

DESCRIPTION: Vault Layout 3660x60 Knockout Ducted,Sump 36"x60"C LADWP E-459

LAYOUT REVIEW

PART NUMBER:	200089892	DRAWN BY:	S. Rodarte
CREATED:	9/14/2021	MODIFIED:	6/20/2024

REV:

SHEET: 1 OF 3

200089892.idw

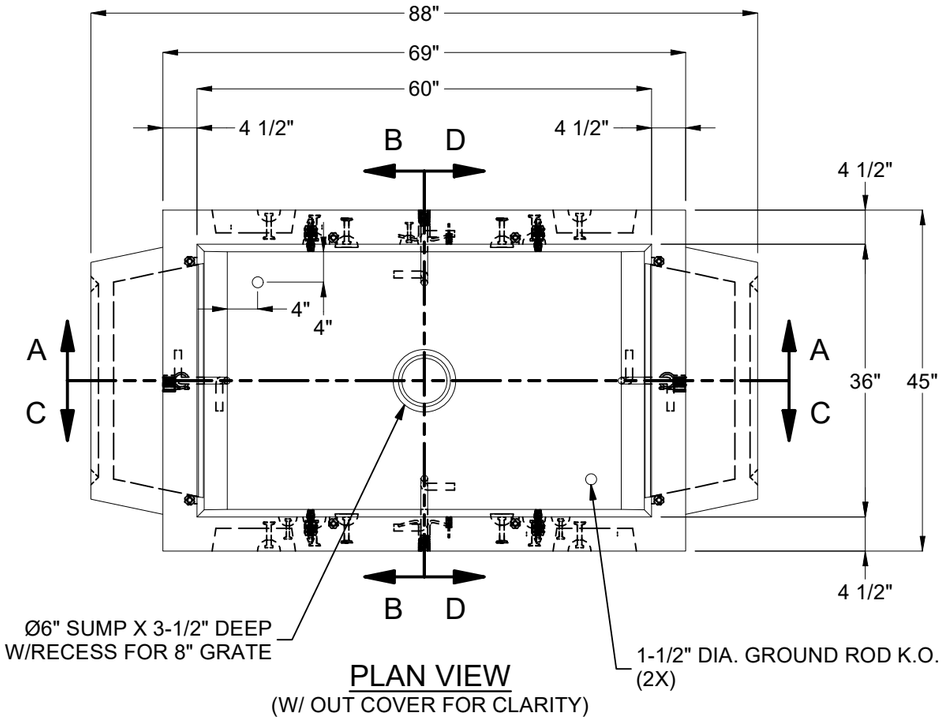

PLAN VIEW
(W/ OUT COVER FOR CLARITY)

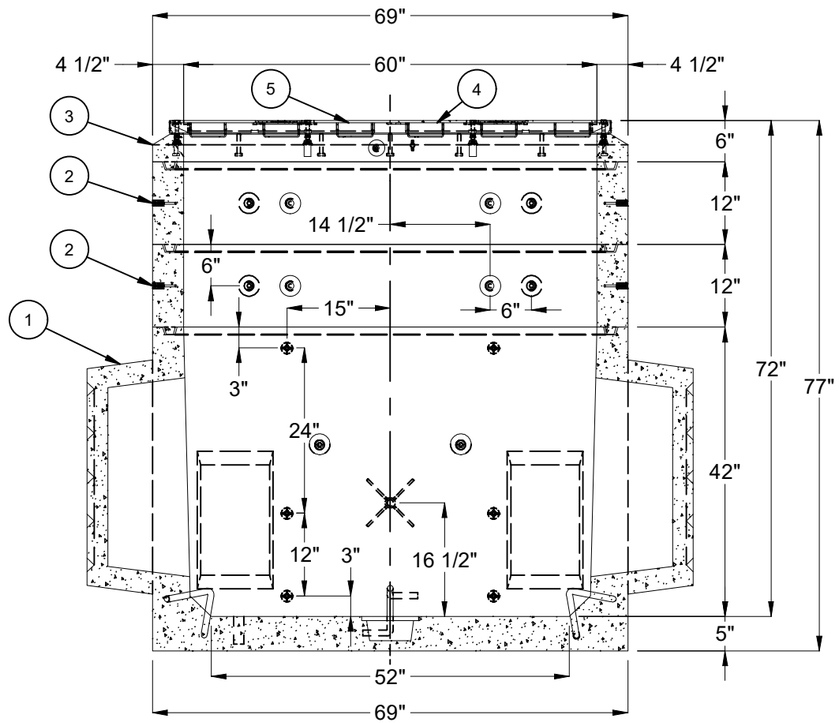

SECTION A-A

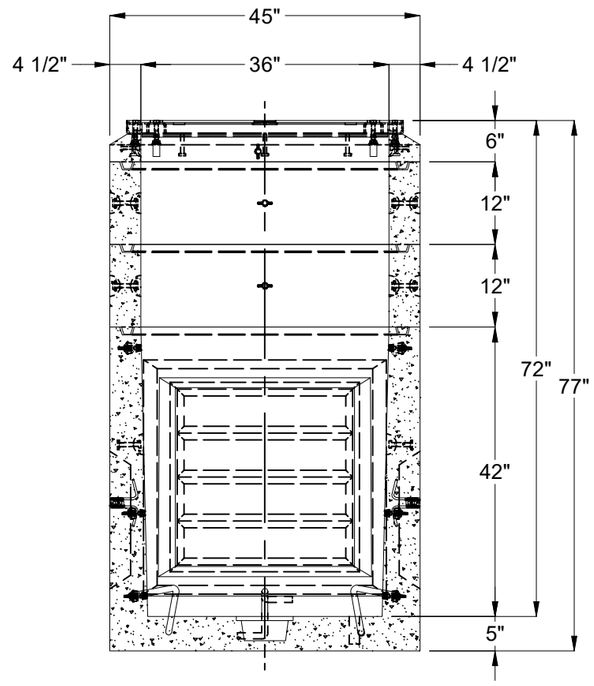

SECTION B-B

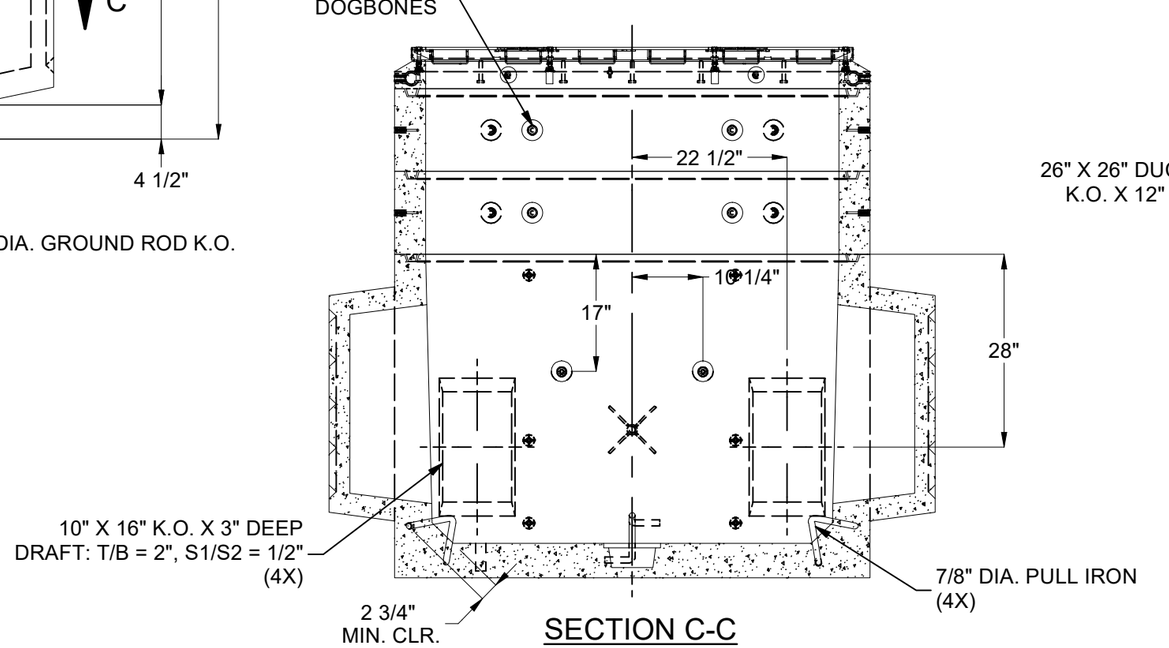

SECTION C-C

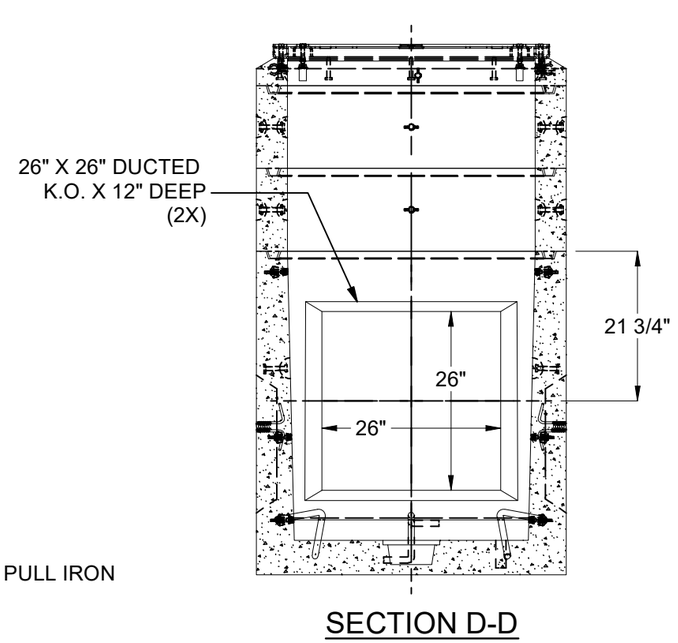

SECTION D-D

200089892.idw

BURY DEPTH:	0.0' - 0.0' to Top		
WATER LEVEL:	3.0'	APPROX. WEIGHT:	7968.31 Lbs
DESIGN SPEC:	AASHTO LRFD,ASTM C857	LOADING SPEC:	AASHTO HL-93
AGENCY:	LADWP	AGENCY SPEC:	E-459

JENSEN PRECAST EST. 1968

WWW.JENSENPRECAST.COM

©2024 Jensen Precast- All rights reserved.
All materials appearing as Jensen Precast documents and the like are proprietary work product and are protected under U.S. copyright and other laws.
Unless in conjunction with business conducted with Jensen Precast, any use of Jensen Precast work product without express, written consent is prohibited, and recipient is prohibited from distributing any and all work product to non-approved third parties under penalty of civil action.

DESCRIPTION:	Vault Layout 3660x60 Knockout Ducted,Sump 36"x60"C LADWP E-459 LAYOUT DRAWING		REV:
PART NUMBER:	200089892	DRAWN BY:	S. Rodarte
CREATED:	9/14/2021	MODIFIED:	6/20/2024

SHEET: 2 OF 3

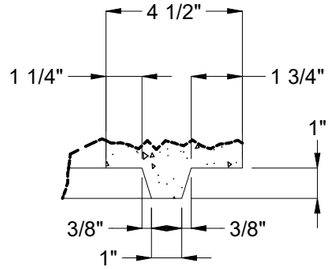

DETAIL P

INSIDE

OUTSIDE

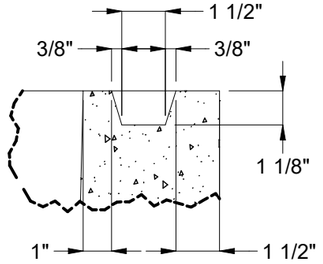

DETAIL M

KEY DETAIL

M

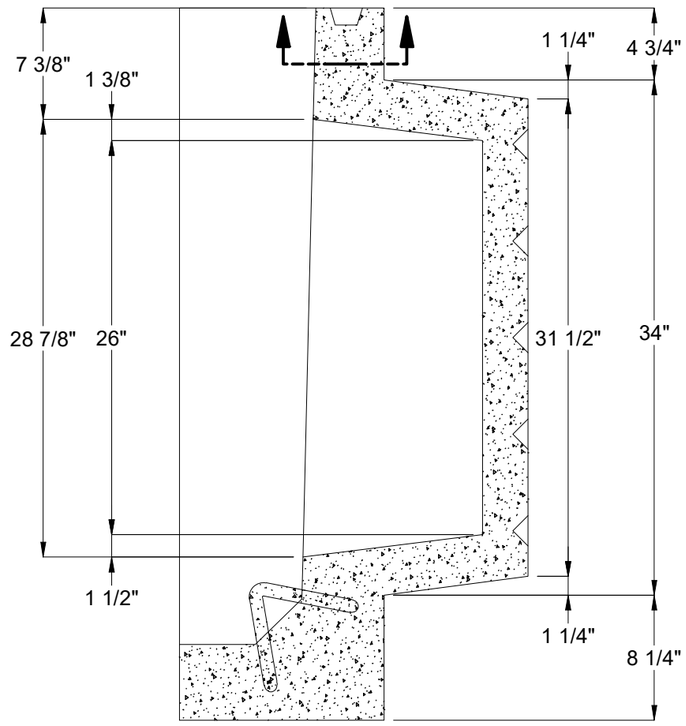

ELEVATION

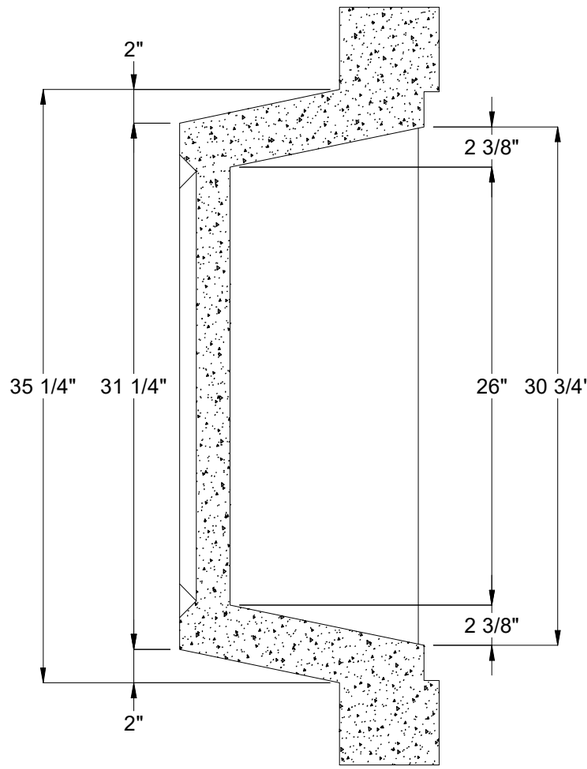

DETAIL PLAN

26" X 26" DEEP KNOCK OUT

BURY DEPTH:	0.0' - 0.0' to Top		
WATER LEVEL:	3.0'	APPROX. WEIGHT:	7968.31 Lbs
DESIGN SPEC:	AASHTO LRFD,ASTM C857	LOADING SPEC:	AASHTO HL-93
AGENCY:	LADWP	AGENCY SPEC:	E-459

JENSEN PRECAST EST. 1968

WWW.JENSENPRECAST.COM

©2024 Jensen Precast- All rights reserved.
All materials appearing as Jensen Precast documents and the like are proprietary work product and are protected under U.S. copyright and other laws.
Unless in conjunction with business conducted with Jensen Precast, any use of Jensen Precast work product without express, written consent is prohibited, and recipient is prohibited from distributing any and all work product to non-approved third parties under penalty of civil action.

DESCRIPTION:	Vault Layout 3660x60 Knockout Ducted,Sump 36"x60"C LADWP E-459 LAYOUT DRAWING		REV:
PART NUMBER:	200089892	DRAWN BY:	S. Rodarte
CREATED:	9/14/2021	MODIFIED:	6/20/2024

SHEET: 3 OF 3

200089892.idw