NOTES
■ CONCRETE MIX USED IN POURING THIS PRODUCT SHALL USE FLY ASH AS AN ADMIXTURE.
■ ALL PARTS TO BE STENCILED: MFG DATE / JOB NUMBER / PRODUCT ID / WEIGHT.
■ EACH CONCRETE SECTION SHALL BE MARKED ON THE INSIDE & OUTSIDE WITH "JENSEN PRECAST", THE DESIGNATION "DWP/FA-CN", AND THE DATE OF THE POUR.
■ EACH CONCRETE SECTION SHALL HAVE CAST-IN ON THE INSIDE "JENSEN", THE YEAR, AND THE DESIGNATION "FA-CN".

BILL OF MATERIALS

ITEM	UNIT QTY	QTY	PART NUMBER	DESCRIPTION
1	2.092 ft^3	2.092 ft^3	100005993	CONCRETE 5500 PSI DRYCAST MIX
2	1	1	100006704	FRAME 3660 CAST-IN GALV
3	1	3	100028358	ANCHOR DOGBONE P52 1T X 2-5/8" GALV
4	1	2	100002766	Insert Ferrule Loop 0.625 x 3.5" Zinc (F42 or Equiv.)
5	1	2	100002765	Insert Ferrule Loop 0.5 x 2.75" Zinc (F42 or Equiv.)
6	1	8	100008114	INSERT THREADED METAL 1/2-13 UNC 1-1/2 IN OPEN
7	1	1	100017934	REINFORCING MAT 100017934

100012197.idw

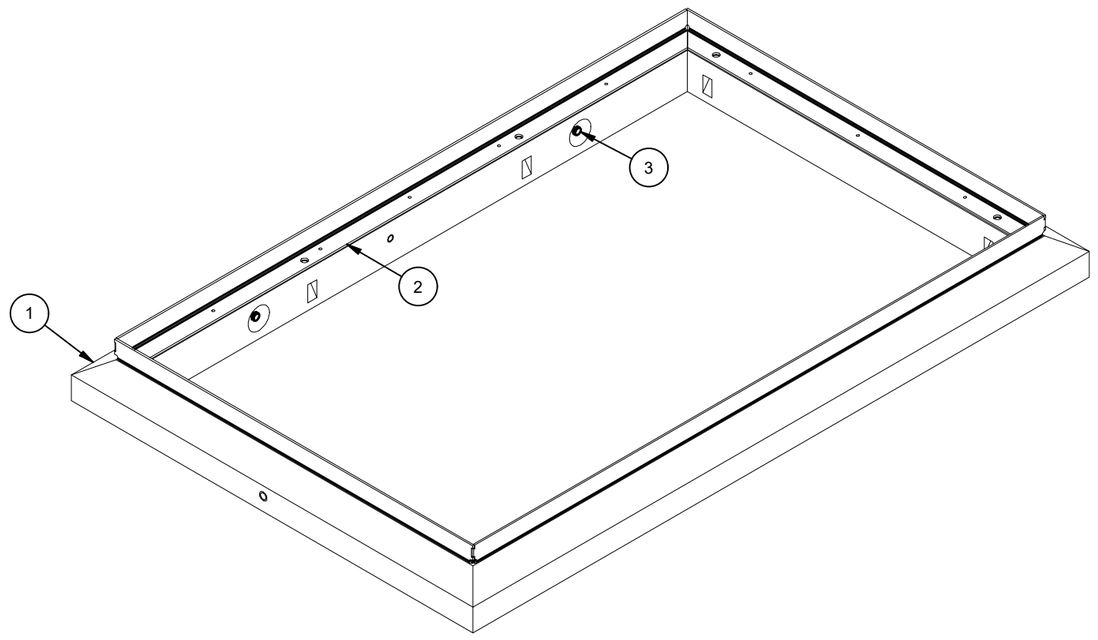

ISOMETRIC VIEW

LIFTING NOTES
■ DEMOLDING: THIS CONCRETE PRODUCT IS DESIGNED TO BE LIFTED AT 2,500 PSI WITH 3 LIFT CONNECTIONS EQUALLY LOADED TO 3 LIFTING POINT AT A MINIMUM 60° SLING ANGLE, MEASURED FROM HORIZONTAL.
■ INSTALLATION: THIS CONCRETE PRODUCT IS DESIGNED TO BE LIFTED AT 5,500 PSI WITH 3 LIFT CONNECTIONS EQUALLY LOADED TO 3 LIFTING POINT AT A MINIMUM 60° SLING ANGLE, MEASURED FROM HORIZONTAL.

BURY DEPTH:	0.0' - 0.0' to Top		
WATER LEVEL:	3.0'	APPROX. WEIGHT:	386.37 Lbs
DESIGN SPEC:	AASHTO LRFD,ACI 318,ASTM C857	LOADING SPEC:	AASHTO HL-93
REINFORCEMENT TYPE:	Rebar	LIFTING TYPE:	Dogbone

JENSEN PRECAST EST. 1968

WWW.JENSENPRECAST.COM

©2023 Jensen Precast- All rights reserved.
All materials appearing as Jensen Precast documents and the like are proprietary work product and are protected under U.S. copyright and other laws.
Unless in conjunction with business conducted with Jensen Precast, any use of Jensen Precast work product without express, written consent is prohibited, and recipient is prohibited from distributing any and all work product to non-approved third parties under penalty of civil action.

REVISION HISTORY			
REV	DESCRIPTION	DATE	APPROVED
C-3	REMOVED RFI TAG	7/6/2023	

DESCRIPTION:	Top Riser 3660x6 Cast-In Frame LADWP E-459 CASTING LAYOUT		REV: C-3
PART NUMBER:	100012197	DRAWN BY: D. Mejia	SHEET: 1 OF 2
CREATED:	6/7/2019	MODIFIED: 7/6/2023	

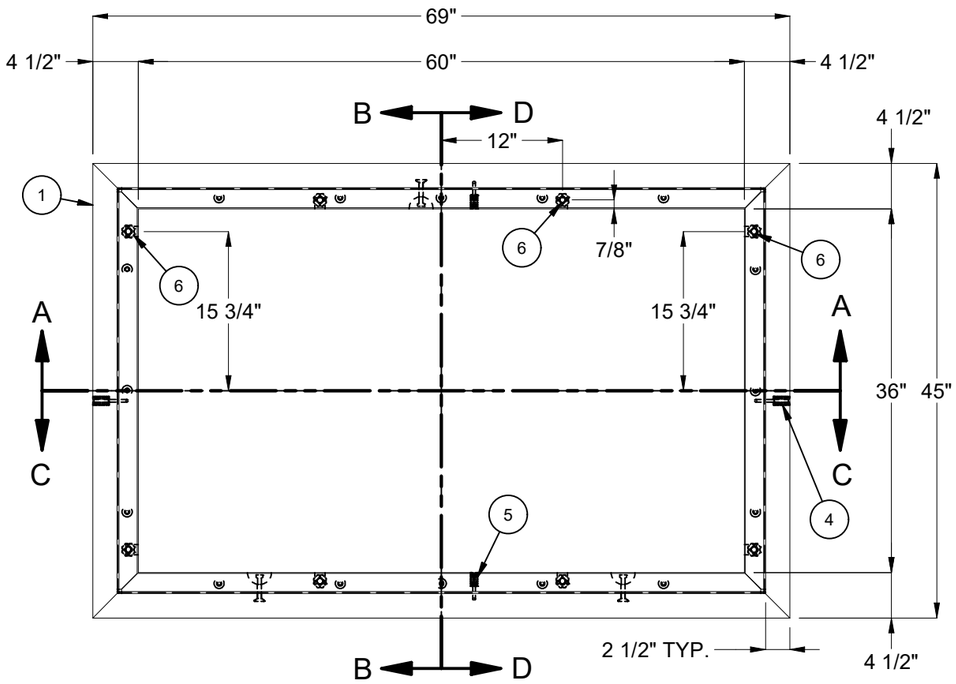

PLAN VIEW

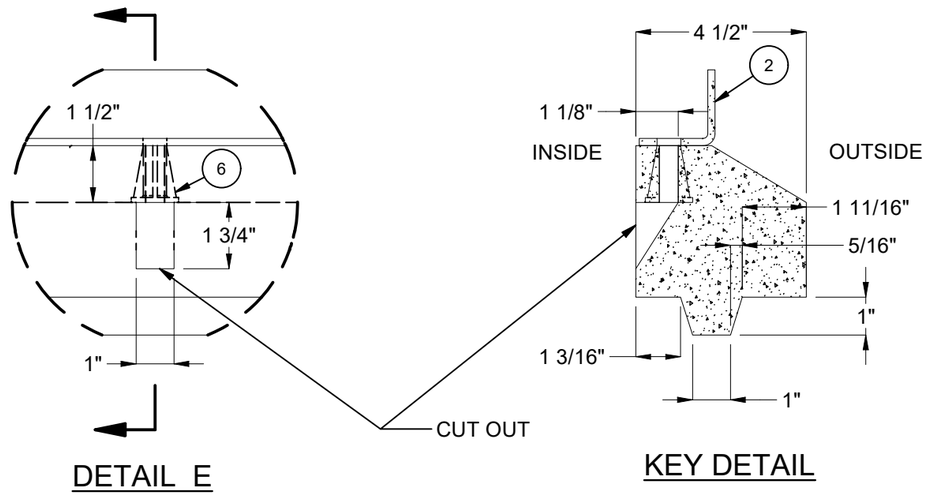

DETAIL E

KEY DETAIL

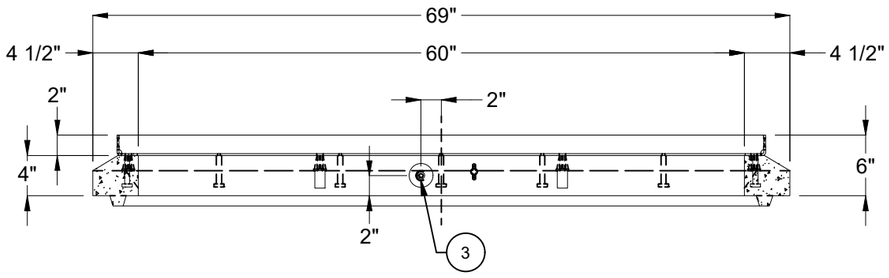

SECTION A-A

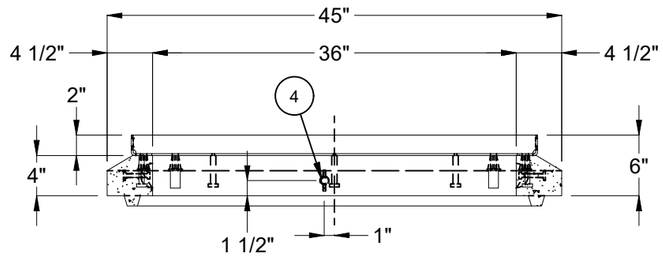

SECTION B-B

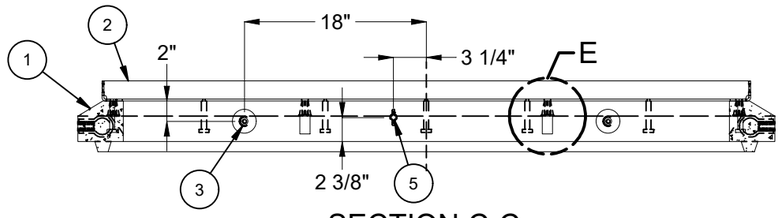

SECTION C-C

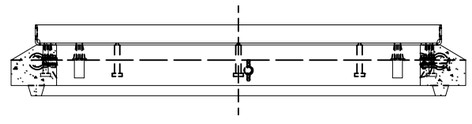

SECTION D-D

BURY DEPTH:	0.0' - 0.0' to Top		
WATER LEVEL:	3.0'	APPROX. WEIGHT:	386.37 Lbs
DESIGN SPEC:	AASHTO LRFD,ACI 318,ASTM C857	LOADING SPEC:	AASHTO HL-93
REINFORCEMENT TYPE:	Rebar	LIFTING TYPE:	Dogbone

JENSEN PRECAST EST. 1968

WWW.JENSENPRECAST.COM

©2023 Jensen Precast- All rights reserved.
All materials appearing as Jensen Precast documents and the like are proprietary work product and are protected under U.S. copyright and other laws.
Unless in conjunction with business conducted with Jensen Precast, any use of Jensen Precast work product without express, written consent is prohibited, and recipient is prohibited from distributing any and all work product to non-approved third parties under penalty of civil action.

DESCRIPTION:	Top Riser 3660x6 Cast-In Frame LADWP E-459 CASTING DRAWING		REV: C-3
PART NUMBER:	100012197	DRAWN BY:	D. Mejia
CREATED:	6/7/2019	MODIFIED:	7/6/2023
			SHEET: 2 OF 2

100012197.idw