NOTES:

■ STANDARDS. AASHTO LRFD BRIDGE DESIGN SPECIFICATIONS, 8TH EDITION, WITH 2022 CALTRANS AMENDMENTS, CITY OF LOS ANGELES BUREAU OF ENGINEERING STANDARD PLAN S-601, LATEST, MANUAL PART H, LADWP P 178, ASTM C-857. STRUCTURAL CALCS FOR BOX: #33541.

■ MATERIAL. CONCRETE, F'c=5,500 PSI. MIX TO INCLUDE FLY ASH AND DCI. REINFORCEMENT PER ASTM A-706, Fy=60,000.

■ LOADS. VERTICAL LIVE LOAD: AASHTO HL-93. LIVE LOAD SURCHARGE: PER LA BOE PART H, FIGURE H 374.2A. MINIMUM 80 PSF (TO BOTTOM OF VAULT) OR LADWP P 178 (104 PSF). SOIL LATERAL LOADS: 40 PCF (DRY), 81 PCF (SATURATED), SATURATED SOIL CONDITIONS 3'-0" BELOW GRADE. SOIL BEARING CAPACITY = 1,500 PSF. DESIGN SOIL DENSITY IS 120 PCF.

■ LOADS NOT INCLUDED. DESIGN DOES NOT INCLUDE COOPER E-80 RAILROAD LOADS OR LATERAL OR SURCHARGE LOADS THAT ARE PRODUCED BY FOOTING OR FOUNDATIONS ADJACENT TO THE STRUCTURE. THIS SUBSTRUCTURE SHALL BE KEPT AT LEAST IN A 1:1 RATIO AWAY FROM ALL FOOTINGS AND FOUNDATIONS, UNLESS THE ENGINEER OF RECORD APPROVES IN WRITING.

■ INSTALLATION. VAULT TO BE PLACED ON A MIN. 6" BASE OF CRUSHER RUN FOR EASE OF INSTALLATION AND EVEN LOAD DISTRIBUTION. BASE MATERIAL IN ACCORDANCE WITH SECTION 200-2 OF THE SSPWC (GREEN BOOK).

■ INSTALLATION LIMITS. TOP OF VAULT SHALL BE AT GRADE.

■ EACH CONCRETE SECTION SHALL BE MARKED ON THE INSIDE & OUTSIDE WITH "JENSEN PRECAST", THE DESIGNATION "DWP/FA-CN", AND THE DATE OF THE POUR.

■ EACH CONCRETE SECTION SHALL HAVE CAST-IN ON THE INSIDE "JENSEN", THE YEAR, AND THE DESIGNATION "FA-CN".

■ EACH PIECE TO BE STENCILIED WITH ITS PART NO.

■ MINIMUM EXCAVATION SIZE: 4'-9" X 8'-4" X DEPTH REQ'D.

■ VAULT SHALL HAVE FABRICATION AND SITE INSPECTION BY LA CITY INSPECTOR IN ACCORDANCE WITH SECTION 2-11 & 4-1.3 OF THE LATEST LA BOE "BROWN BOOK"

■ ADDITIONAL SUBMITTAL, PERMIT AND CONSTRUCTION PLAN REVIEW WILL BE REQUIRED FOR EACH PROJECT LOCATION. SUBMIT TO CITY ENGINEERS FOR APPROVAL PRIOR TO START OF ANY CONSTRUCTION.

■ ALL INSTALLATIONS SHALL COMPLY WITH ALL OTHER LOCAL GOVERNING CODES AND REGULATION INCLUDING CALIFORNIA PUBLIC UTILITIES COMMISION REGULATIONS.

STOCKPILE - JENSEN PRECAST
CITY OF LOS ANGELES INSPECTION
REQUIRED WO# C0034604

BILL OF MATERIALS

ITEM	UNIT QTY	QTY	PART NUMBER	DESCRIPTION	MASS (lb)
1	1	1	100012246	Vault 3660x42 Rect. Bottom Section Knockout Ducted,Sump LADWP E-459 COLA	5175
2	1	1	200077010	Riser 3660x12 LADWP COLA	986
3	1	1	100012199	Top Riser 3660x6 Cast-In Frame LADWP E-459 COLA	373
4	1	1	100006367	STL BEAM 3660-T BAR GALV RPM	18
5	1	2	100007052	COVER 3660 POLYMER LADWP HALF	140
6	1	8	100004454	BOLT PENTA 1/2-13 UNC 0.875 HEAD 2.5L SS	
7	1	2	100004043	BOLT HEX 1/2-13 UNC 1.5 316SS	
8	1.000 ul	1.000 ul	100005749	SEALANT JOINT BUTYL RUBBER ASTM C-990 AND M198 CS-102 1IN EQUIV X14.5FT PER BOX 118FT	

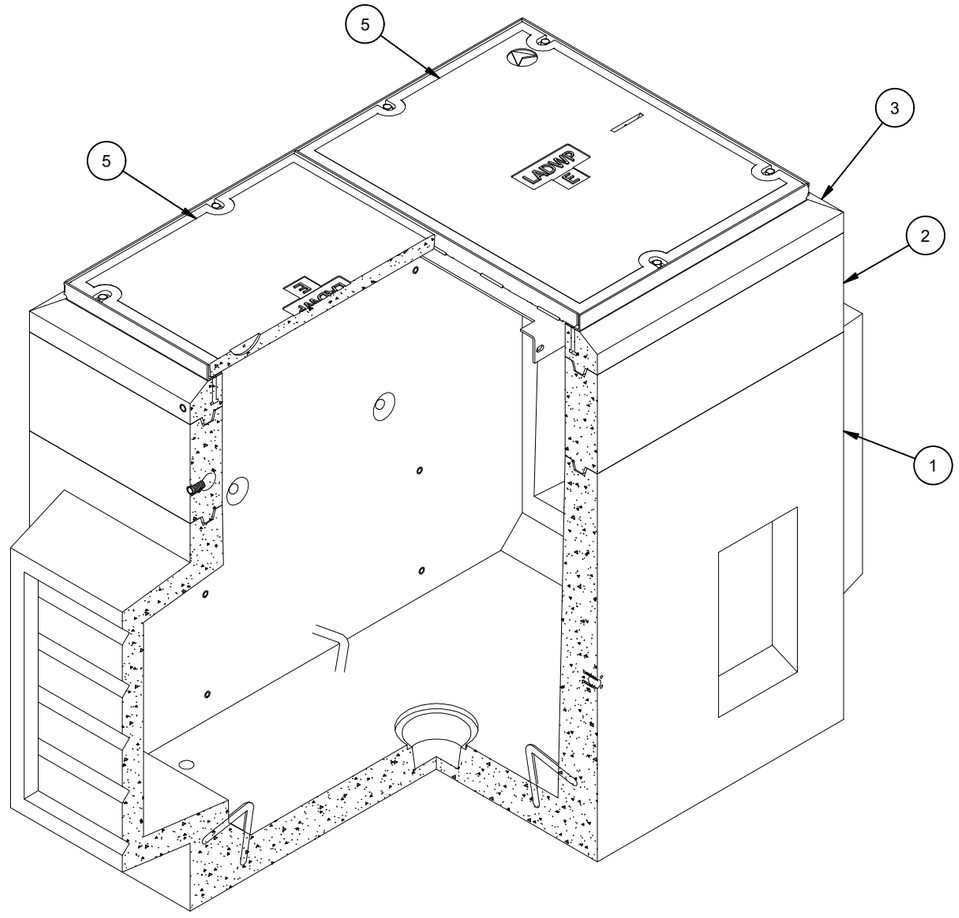

ISOMETRIC VIEW

100010360.idw

LIFTING NOTES

■ FIELD INSTALLATION: PLANT DEMOLDING: MINIMUM HANDLING CONCRETE STRENGTH F'c = 5500 PSI RIGGING EQUALIZER REQUIRED TO EQUALIZE LOAD TO 4 LIFTING POINTS WITH A SLING ANGLE BETWEEN 60° AND 90°

REVISION HISTORY

REV	DESCRIPTION	DATE	APPROVED
B-4	ADDED DETAIL VIEW OF TOP RISER	9/13/2024	

BURY DEPTH:	0.0' - 0.0' to Top		
WATER LEVEL:	3.0'	APPROX. WEIGHT:	6833.71 Lbs
DESIGN SPEC:	AASHTO LRFD,ACI 318,ASTM C857	LOADING SPEC:	AASHTO HL-93
AGENCY:	LADWP	AGENCY SPEC:	E-459 COLA RPM

JENSEN PRECAST EST. 1968

WWW.JENSENPRECAST.COM

©2024 Jensen Precast- All rights reserved.
All materials appearing as Jensen Precast documents and the like are proprietary work product and are protected under U.S. copyright and other laws.
Unless in conjunction with business conducted with Jensen Precast, any use of Jensen Precast work product without express, written consent is prohibited, and recipient is prohibited from distributing any and all work product to non-approved third parties under penalty of civil action.

DESCRIPTION: Vault Layout 3660x60 Knockout Sump 36"x60"C LADWP E-459 COLA RPM
LAYOUT REVIEW

REV: B-4

PART NUMBER:	100010360	DRAWN BY:	J. Prado
CREATED:	6/29/2023	MODIFIED:	9/13/2024

SHEET: 1 OF 3

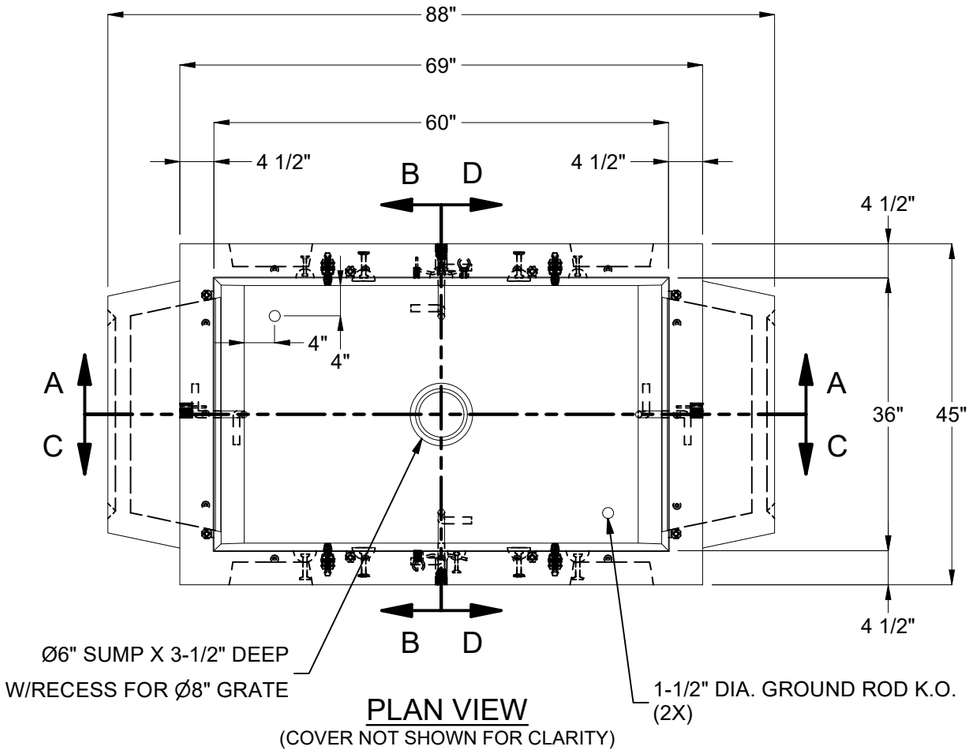

PLAN VIEW
(COVER NOT SHOWN FOR CLARITY)

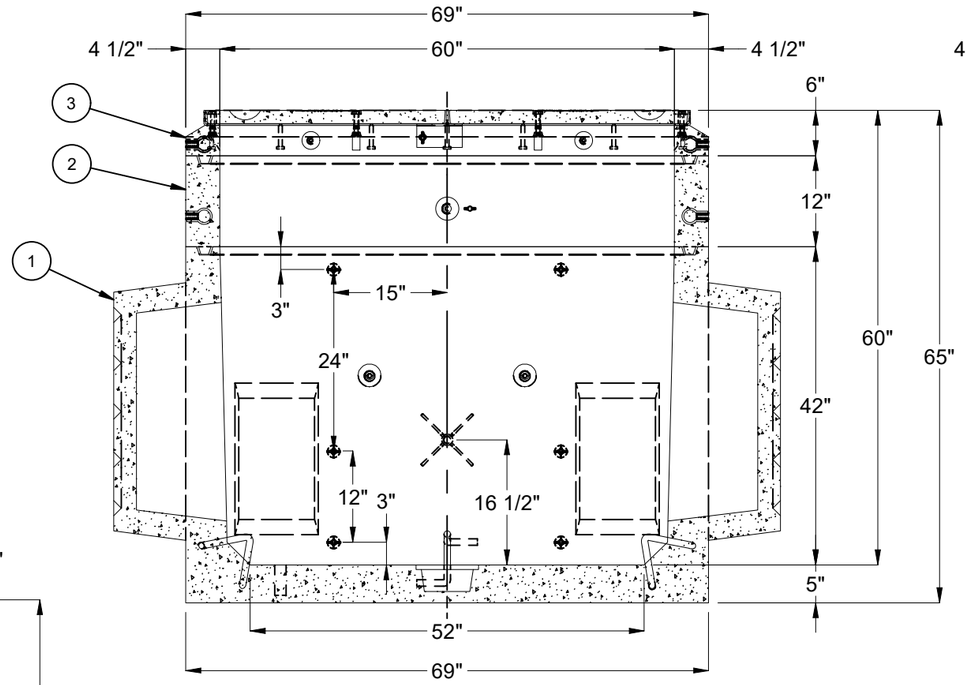

SECTION A-A

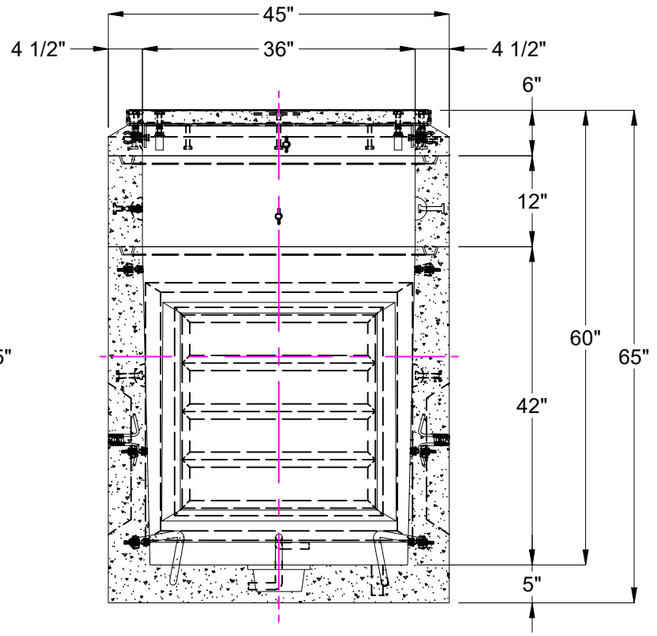

SECTION B-B

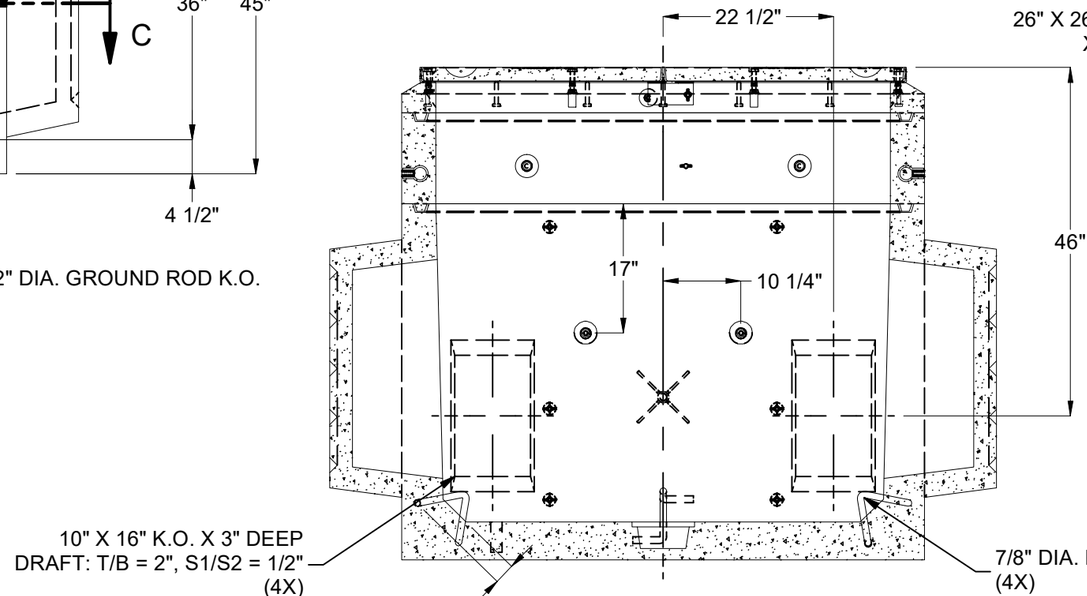

SECTION C-C

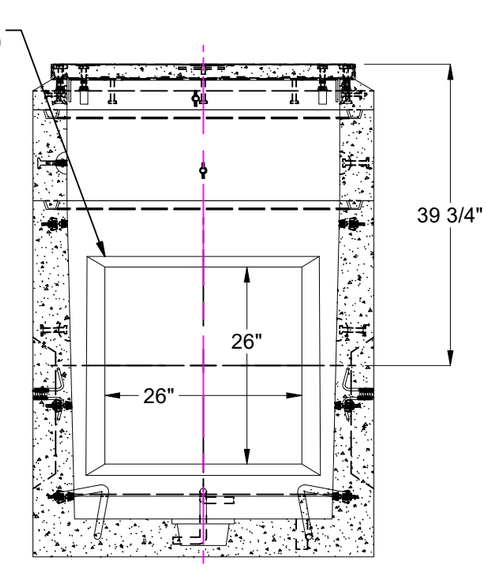

SECTION D-D

BURY DEPTH:	0.0' - 0.0' to Top		
WATER LEVEL:	3.0'	APPROX. WEIGHT:	6833.71 Lbs
DESIGN SPEC:	AASHTO LRFD,ACI 318,ASTM C857	LOADING SPEC:	AASHTO HL-93
AGENCY:	LADWP	AGENCY SPEC:	E-459 COLA RPM

JENSEN PRECAST EST. 1968

WWW.JENSENPRECAST.COM

©2024 Jensen Precast- All rights reserved.
All materials appearing as Jensen Precast documents and the like are proprietary work product and are protected under U.S. copyright and other laws.
Unless in conjunction with business conducted with Jensen Precast, any use of Jensen Precast work product without express, written consent is prohibited, and recipient is prohibited from distributing any and all work product to non-approved third parties under penalty of civil action.

DESCRIPTION:	Vault Layout 3660x60 Knockout Sump 36"x60"C LADWP E-459 COLA RPM LAYOUT DRAWING		REV: B-4
PART NUMBER:	100010360	DRAWN BY:	J. Prado
CREATED:	6/29/2023	MODIFIED:	9/13/2024

SHEET: 2 OF 3

100010360.idw

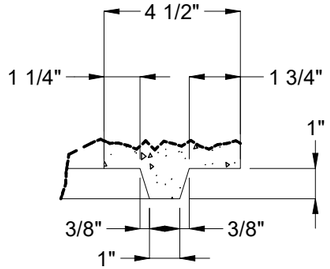

DETAIL P

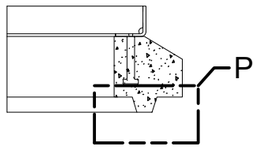

TOP RISER

INSIDE OUTSIDE

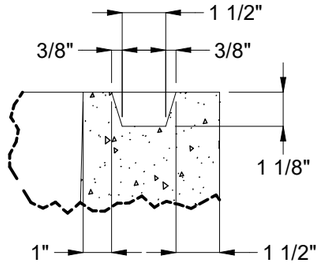

DETAIL M

KEY DETAIL

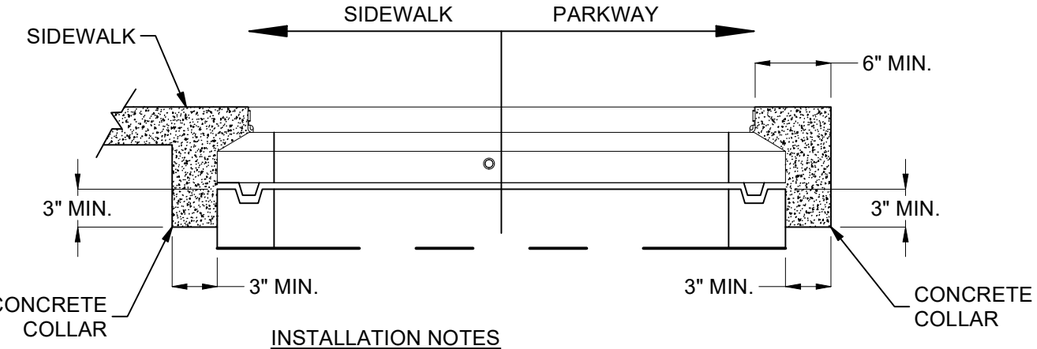

INSTALLATION NOTES

1. CONTINUOUS CONCRETE COLLAR FOUR SIDES.
2. WHERE THERE IS SIDEWALK, COLLAR TO BE MONOLITHIC WITH SIDEWALK.
3. FLUSH WITH ADJACENT TOP F CURB AND/OR LANDSCAPE BACKFILL WITHIN 1/4".

INSTALLATION

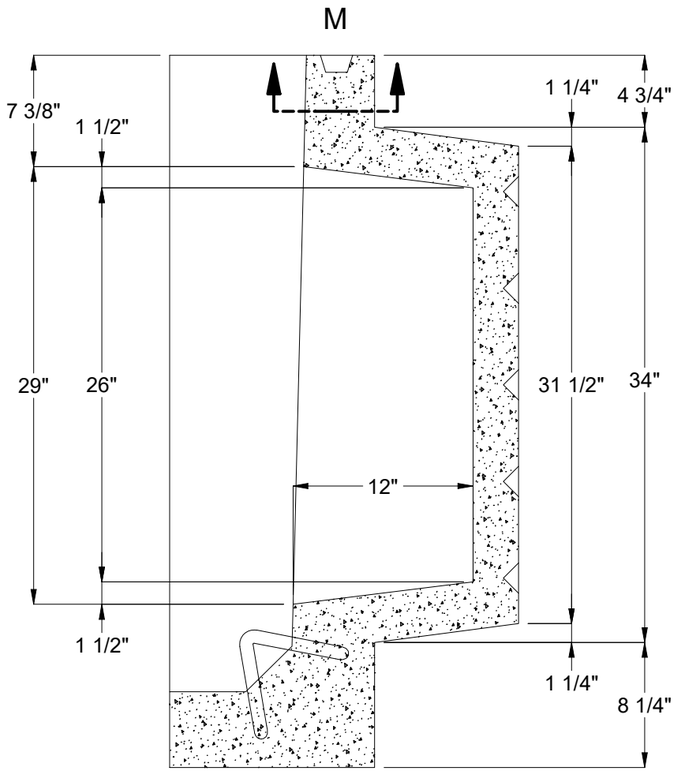

ELEVATION

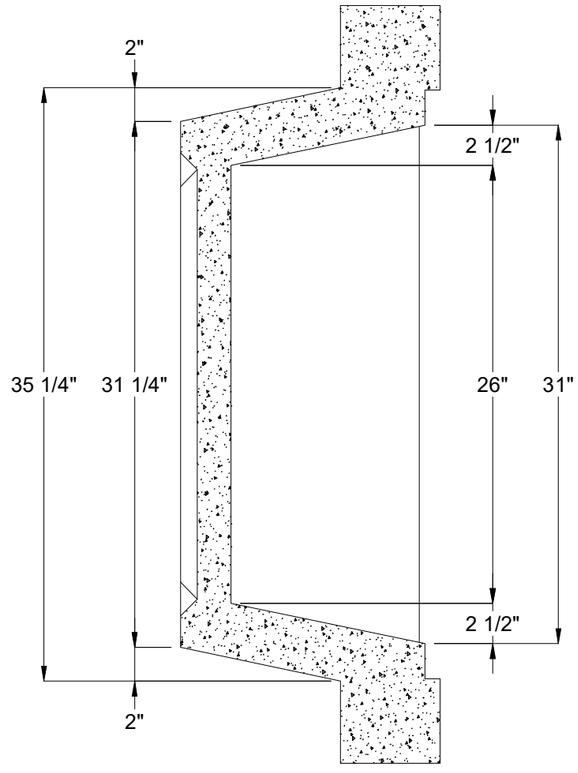

DETAIL PLAN

26" X 26" DEEP KNOCK OUT

BURY DEPTH:	0.0' - 0.0' to Top		
WATER LEVEL:	3.0'	APPROX. WEIGHT:	6833.71 Lbs
DESIGN SPEC:	AASHTO LRFD,ACI 318,ASTM C857	LOADING SPEC:	AASHTO HL-93
AGENCY:	LADWP	AGENCY SPEC:	E-459 COLA RPM

JENSEN PRECAST EST. 1968

WWW.JENSENPRECAST.COM

©2024 Jensen Precast- All rights reserved.
All materials appearing as Jensen Precast documents and the like are proprietary work product and are protected under U.S. copyright and other laws.
Unless in conjunction with business conducted with Jensen Precast, any use of Jensen Precast work product without express, written consent is prohibited, and recipient is prohibited from distributing any and all work product to non-approved third parties under penalty of civil action.

DESCRIPTION:	Vault Layout 3660x60 Knockout Sump 36"x60"C LADWP E-459 COLA RPM LAYOUT DRAWING		REV: B-4
PART NUMBER:	100010360	DRAWN BY:	J. Prado
CREATED:	6/29/2023	MODIFIED:	9/13/2024

SHEET: 3 OF 3

100010360.idw