NOTES
■ ALL PARTS TO BE STENCILED: MFG DATE / JOB NUMBER / PRODUCT ID / WEIGHT.

BILL OF MATERIALS

ITEM	UNIT QTY	QTY	PART NUMBER	DESCRIPTION
1	14.028 ft^3	14.028 ft^3	100006029	CONCRETE 5500 PSI SCC ED
4	1	2	100003026	PULL IRON OFFSET .875DIA 6H X 5W X 10.875L GALV
5	1	8	100012720	INSERT PLASTIC W/ BREAK OFF SNAP 0.5IN
2	1	4	100002867	ANCHOR DOGBONE P52 2T X 3-3/8" GALV
3	1	2	100044597	Insert Thin Slab Coil 4-Leg 1 x 4" Galv (F53 or Equiv.)
6	1	1	100017868	REINFORCING MAT 100017868

100012129.idw

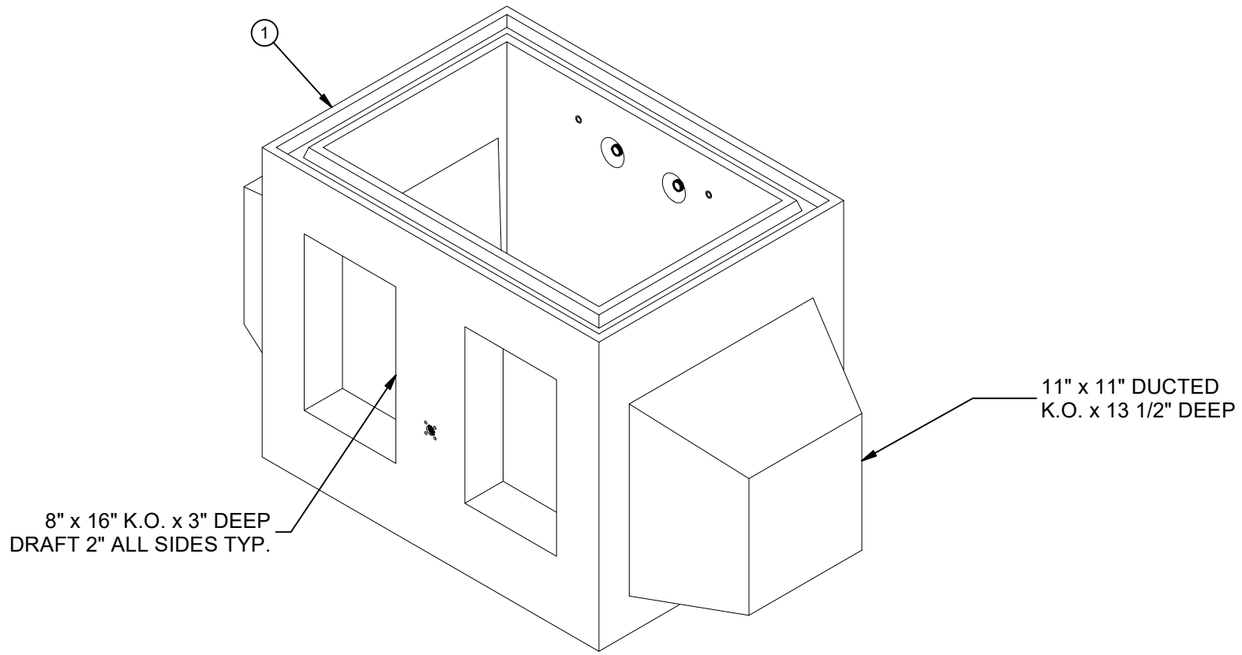

ISO VIEW

LIFTING NOTES
■ DEMOLDING: THIS CONCRETE PRODUCT IS DESIGNED TO BE LIFTED AT 2,500 PSI WITH 2 LIFT CONNECTIONS EQUALLY LOADED TO 2 LIFTING POINTS AT A MINIMUM 90° SLING ANGLE, MEASURED FROM HORIZONTAL.
■ INSTALLATION: THIS CONCRETE PRODUCT IS DESIGNED TO BE LIFTED AT 5,500 PSI WITH 4 LIFT CONNECTIONS EQUALLY LOADED TO 4 LIFTING POINTS AT A MINIMUM 60° SLING ANGLE, MEASURED FROM HORIZONTAL.

REVISION HISTORY			
REV	DESCRIPTION	DATE	APPROVED
B-6	IFS INITIAL RELEASE	1/11/2023	

BURY DEPTH:	0.5' - 2.5' to Top		
WATER LEVEL:	3.0'	APPROX. WEIGHT:	2120.91 Lbs
DESIGN SPEC:	ACI 318,ASTM C857	LOADING SPEC:	A-16 (AASHTO HS20-44)
REINFORCEMENT TYPE:	Rebar	LIFTING TYPE:	Dogbone

JENSEN PRECAST EST. 1968

WWW.JENSENPRECAST.COM

©2023 Jensen Precast- All rights reserved.
All materials appearing as Jensen Precast documents and the like are proprietary work product and are protected under U.S. copyright and other laws.
Unless in conjunction with business conducted with Jensen Precast, any use of Jensen Precast work product without express, written consent is prohibited, and recipient is prohibited from distributing any and all work product to non-approved third parties under penalty of civil action.

DESCRIPTION:	Vault 2436x30 Rect. Bottom Section Knockout Ducted,Sump LADWP E-491 G1 CASTING LAYOUT		REV: B-6
PART NUMBER:	100012129	DRAWN BY:	R. Ramos
CREATED:	6/7/2019	MODIFIED:	1/11/2023
			SHEET: 1 OF 2

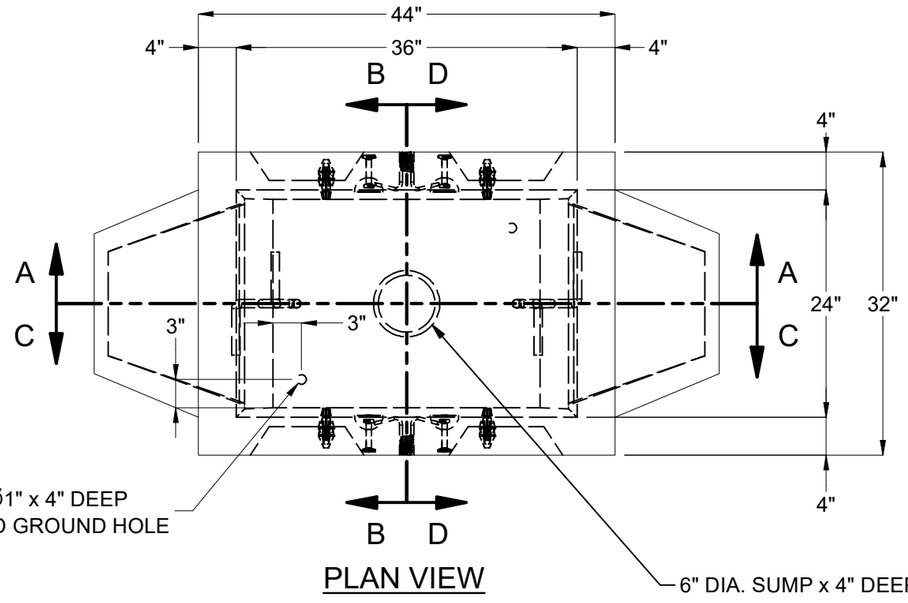

PLAN VIEW

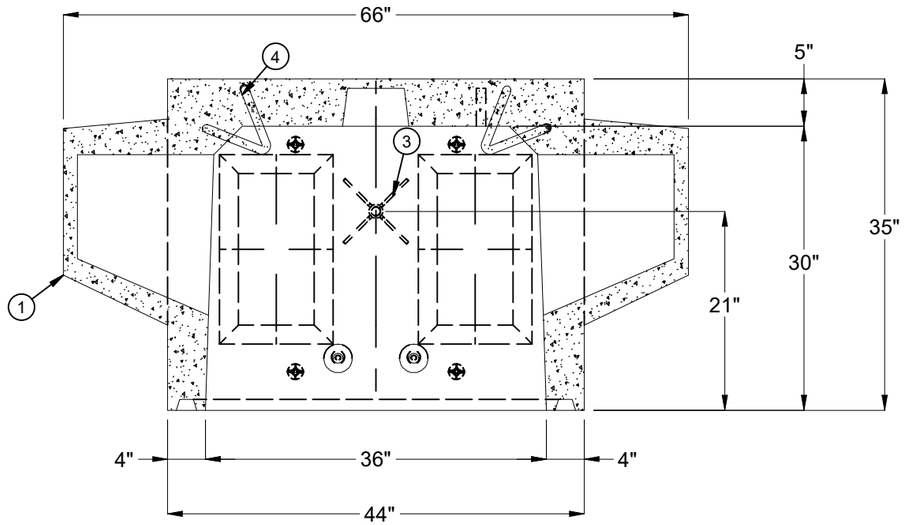

SECTION A-A

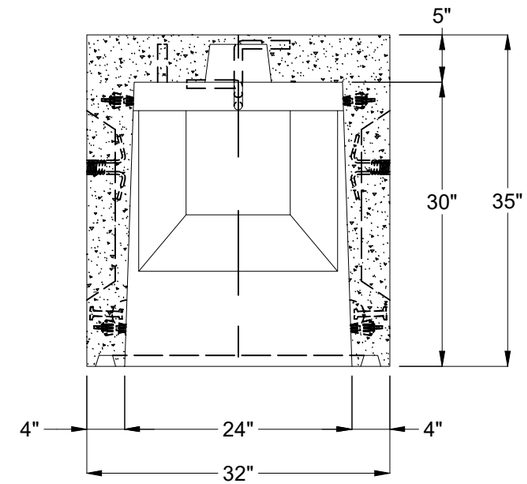

SECTION B-B

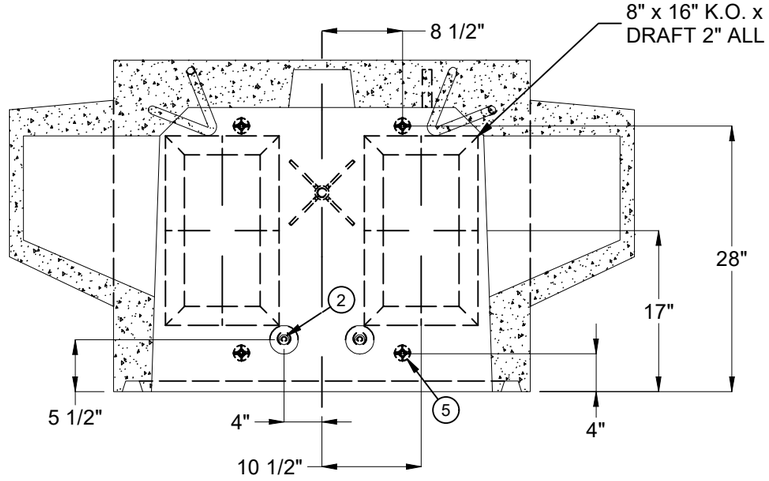

SECTION C-C

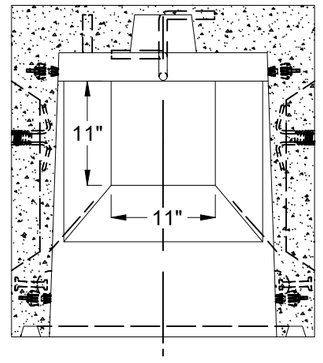

SECTION D-D

BURY DEPTH:	0.5' - 2.5' to Top		
WATER LEVEL:	3.0'	APPROX. WEIGHT:	2120.91 Lbs
DESIGN SPEC:	ACI 318,ASTM C857	LOADING SPEC:	A-16 (AASHTO HS20-44)
REINFORCEMENT TYPE:	Rebar	LIFTING TYPE:	Dogbone

JENSEN PRECAST EST. 1968

WWW.JENSENPRECAST.COM

©2023 Jensen Precast- All rights reserved.
All materials appearing as Jensen Precast documents and the like are proprietary work product and are protected under U.S. copyright and other laws.
Unless in conjunction with business conducted with Jensen Precast, any use of Jensen Precast work product without express, written consent is prohibited, and recipient is prohibited from distributing any and all work product to non-approved third parties under penalty of civil action.

DESCRIPTION:	Vault 2436x30 Rect. Bottom Section Knockout Ducted,Sump LADWP E-491 G1		REV: B-6
	CASTING LAYOUT		SHEET: 2 OF 2
PART NUMBER:	100012129	DRAWN BY:	R. Ramos
CREATED:	6/7/2019	MODIFIED:	1/11/2023

100012129.idw