| NOTES |
|---|
| ■ DESIGNED IN ACCORDANCE WITH C857LOADING USING 5500 PSI COMPRESSIVE STRENGTH CONCRETE AND 60,000 PSI YIELD STRENGTH ASTM A-706 STEEL REINFORCEMENT PER CALCS. #30212. |
| ■ ALL PARTS TO BE STENCILED: MFG DATE / JOB NUMBER / PRODUCT ID / WEIGHT. |

## BILL OF MATERIALS

| ITEM | UNIT QTY | QTY | PART NUMBER | DESCRIPTION |
|---|---|---|---|---|
| 1 | 1.910 ft^3 | 1.910 ft^3 | 100005993 | CONCRETE 5500 PSI DRYCAST MIX |
| 2 | 1 | 1 | 100017853 | REINFORCING MAT 100017853 |
| 3 | 1 | 3 | 100002867 | ANCHOR DOGBONE P52 2T X 3-3/8" GALV |

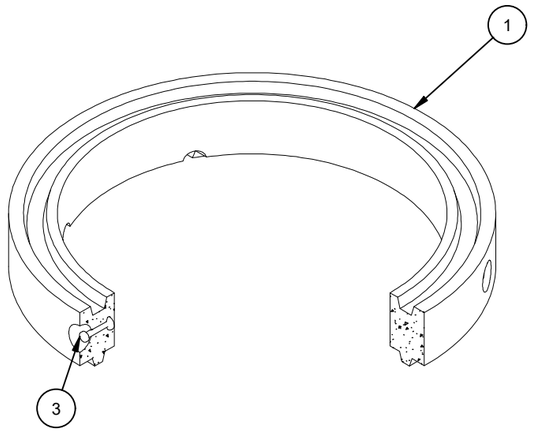


ISOMETRIC VIEW

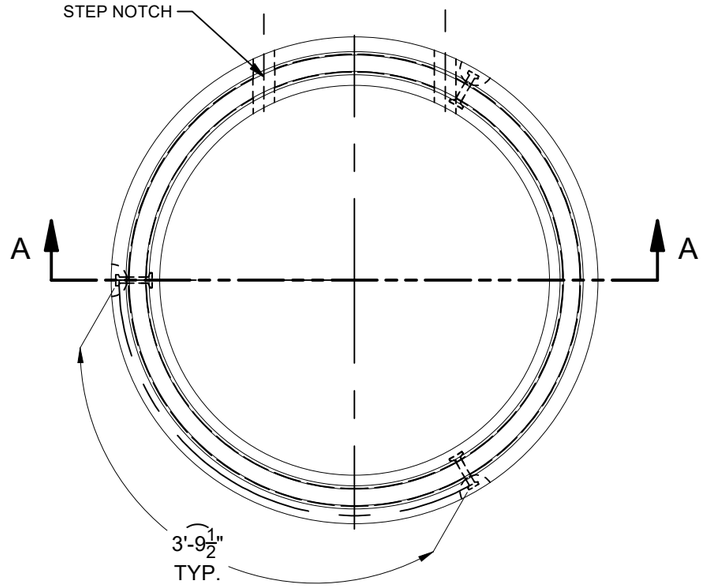


PLAN VIEW

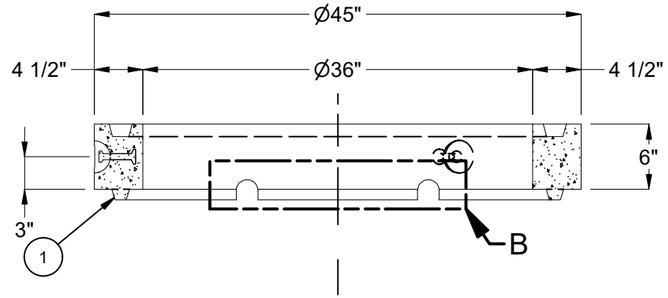


SECTION A-A

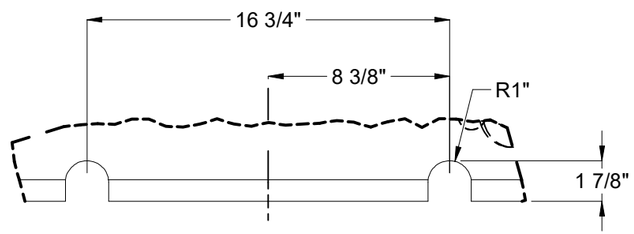


DETAIL B
(NOTCHES FOR KNURLED STEP)

| LIFTING NOTES |
|---|
| ■ THIS CONCRETE PRODUCT IS DESIGNED TO BE LIFTED AT 5,500 PSI WITH 3 LIFT CONNECTIONS EQUALLY LOADED TO 3 LIFTING POINTS AT A MINIMUM 90° SLING ANGLE, MEASURED FROM HORIZONTAL. |

| | | | |
|---|---|---|---|
| BURY DEPTH: | N/A to Top of Section | | |
| WATER LEVEL: | 3.0' | APPROX. WEIGHT: | 294.01 Lbs |
| DESIGN SPEC: | ASTM C857 | LOADING SPEC: | A-16 (AASHTO HS20-44) |
| REINFORCEMENT TYPE: | Hoop Steel | LIFTING TYPE: | Dogbone |

Infrastructure
JENSEN
WWW.JENSENINFRASTRUCTURE.COM

©2026 Jensen Infrastructure - All rights reserved.
All materials appearing as Jensen Infrastructure documents and the like are proprietary work product and are protected under U.S. copyright and other laws.
Unless in conjunction with business conducted with Jensen Infrastructure , any use of Jensen Infrastructure work product without express, written consent is prohibited, and recipient is prohibited from distributing any and all work product to non-approved third parties under penalty of civil action.
This product shall only be produced in a Jensen Infrastructure facility.

| REVISION HISTORY | | | |
|---|---|---|---|
| REV | DESCRIPTION | DATE | APPROVED |
| C-1 | UPDATED TITLE BLOCK | 1/12/2026 | |

| | | | | |
|---|---|---|---|---|
| DESCRIPTION: | Grade Ring D3645x6<br>CASTING LAYOUT | | | REV: C-1 |
| PART NUMBER: | 100012117 | DRAWN BY: | C.Aguillon | SHEET: 1 OF 1 |
| CREATED: | 10/12/2018 | MODIFIED: | 1/12/2026 | |

100012117.idw