NOTES
■ DESIGNED IN ACCORDANCE WITH C478 LOADING USING 5,500 PSI COMPRESSIVE STRENGTH CONCRETE AND 60,000 PSI YIELD STRENGTH ASTM A-706 STEEL REINFORCEMENT PER CALCS. #34576.
■ CONCRETE MIX USED IN POURING THIS PRODUCT SHALL USE FLY ASH AS AN ADMIXTURE.
■ ALL PARTS TO BE STENCILED: MFG DATE / JOB NUMBER / PRODUCT ID / WEIGHT.

BILL OF MATERIALS

ITEM	UNIT QTY	QTY	PART NUMBER	DESCRIPTION
1	3.898 ft^3	3.898 ft^3	100005993	CONCRETE 5500 PSI DRYCAST MIX
2	1	2	100017853	REINFORCING MAT 100017853
3	1	3	100002867	ANCHOR DOGBONE P52 2T X 3-3/8" GALV

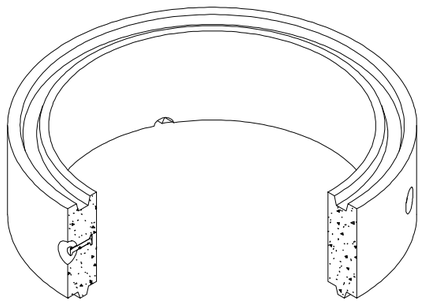

ISO VIEW

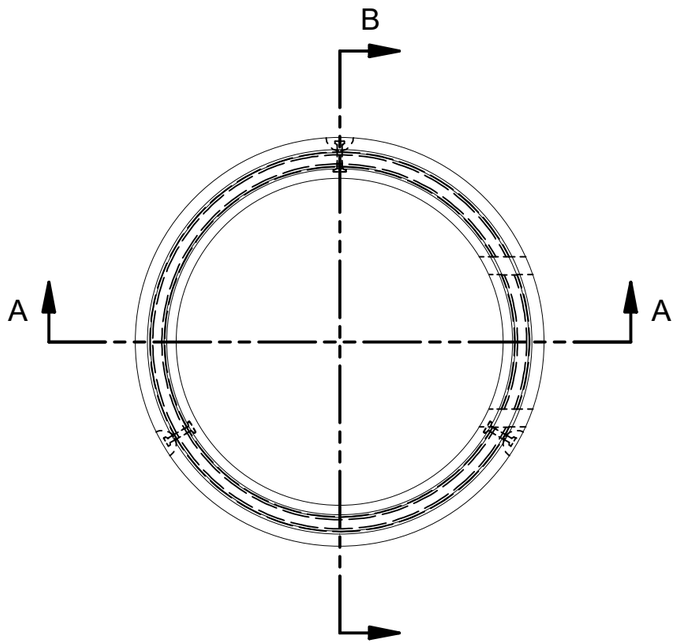

PLAN VIEW

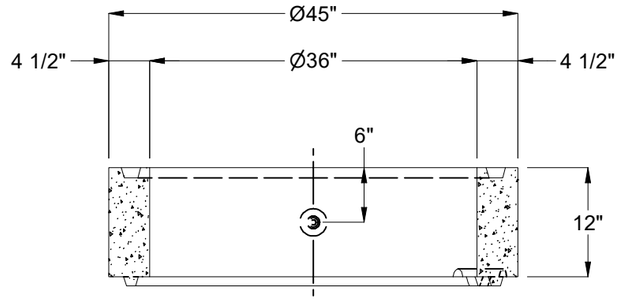

SECTION A-A

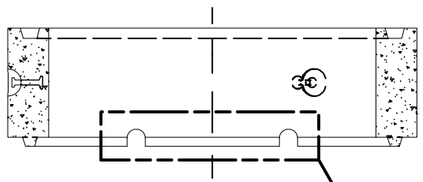

SECTION B-B

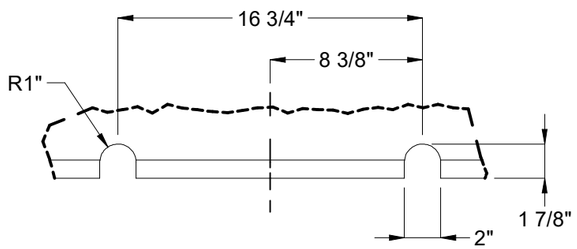

DETAIL C
NOTCHES FOR KNURLED STEP

LIFTING NOTES
■ THIS CONCRETE PRODUCT IS DESIGNED TO BE LIFTED AT 2,500 PSI WITH 3 LIFT CONNECTIONS EQUALLY LOADED TO 3 LIFTING POINTS AT A MINIMUM 90° SLING ANGLE, MEASURED FROM HORIZONTAL.

BURY DEPTH:	0.0' - 12.0' to Top of Section		
WATER LEVEL:	Below Grade	WEIGHT:	586.99 Lbs
DESIGN SPEC:	ASTM C857,ASTM C478	LOADING SPEC:	A-16 (AASHTO HS20-44)
REINFORCEMENT TYPE:	Rebar	LIFTING TYPE:	Dogbone

JENSEN PRECAST EST. 1968

WWW.JENSENPRECAST.COM

©2018 Jensen Precast- All rights reserved.
All materials appearing as Jensen Precast documents and the like are proprietary work product and are protected under U.S. copyright and other laws.
Unless in conjunction with business conducted with Jensen Precast, any use of Jensen Precast work product without express, written consent is prohibited, and recipient is prohibited from distributing any and all work product to non-approved third parties under penalty of civil action.

DESCRIPTION:	Grade Ring D3645x12 CASTING LAYOUT		REV: C-1
PART NUMBER:	100012039	DRAWN BY:	N. Chand
CREATED:	10/12/2018	MODIFIED:	11/17/2020
			SHEET: 1 OF 1

100012039-19522.idw