DESIGN NOTES
■ DESIGNED IN ACCORDANCE WITH AASHTO HS20-44 TRAFFIC BRIDGE LOADING USING 5,500 PSI COMPRESSIVE STRENGTH CONCRETE AND 60,000 PSI YIELD STRENGTH ASTM A-706 STEEL REINFORCEMENT PER CALCS. #
■ ALL PARTS TO BE STENCILED: MFG DATE / JOB NUMBER / PRODUCT ID / WEIGHT.

BILL OF MATERIALS

ITEM	UNIT QTY	QTY	PART NUMBER	DESCRIPTION
1	*Varies*	3.272 ft^3	100024079	CONCRETE #19 SCC
2	2.500 ft	2.500 ft	100008802	ANCHOR CABLE STL 5/16 AIRCRAFT 7X19 GALV
3	1	2	100002867	ANCHOR DOGBONE P52 2T X 3-3/8" GALV
4	1	1	300152581	REINFORCING MAT 300152581
5	1	1	300155413	REINFORCING MAT 300155413

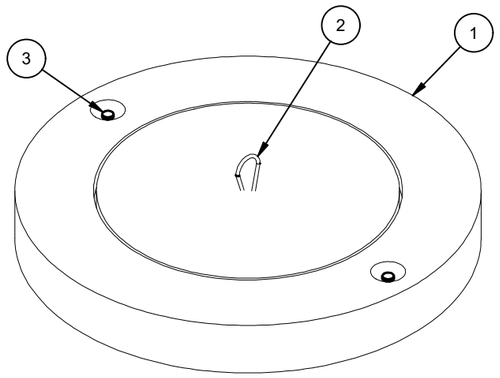

ISOMETRIC VIEW

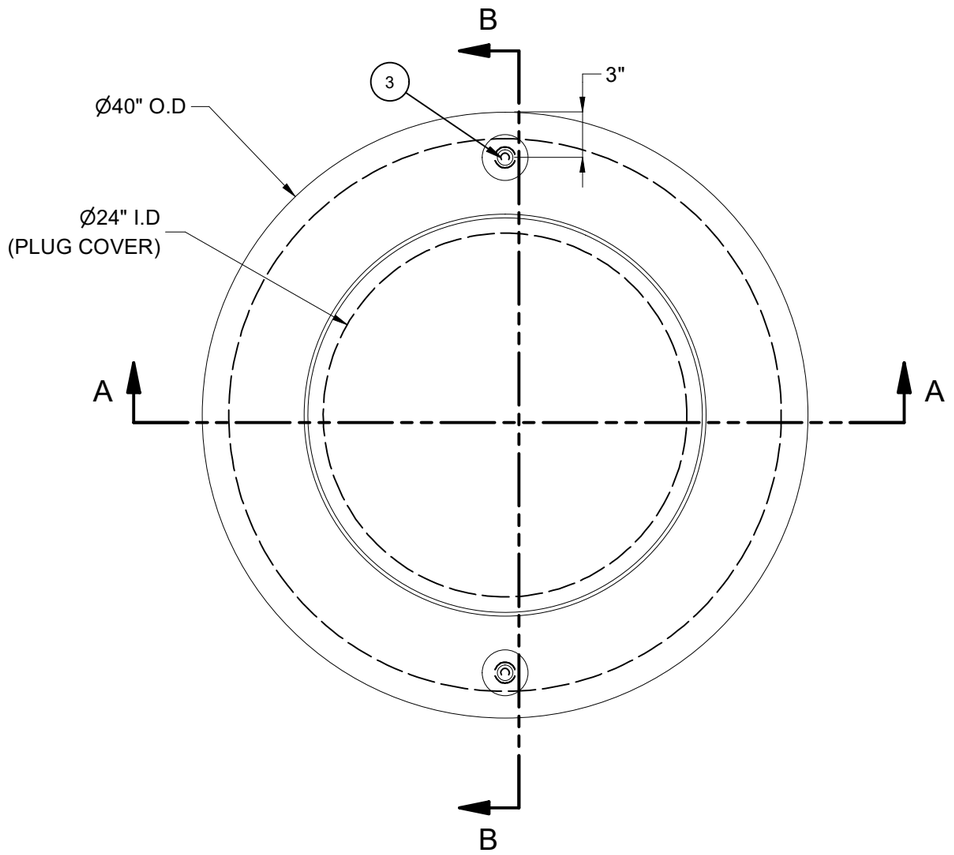

PLAN VIEW

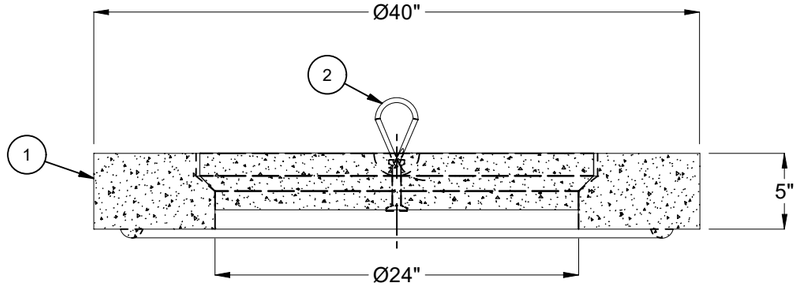

SECTION A-A

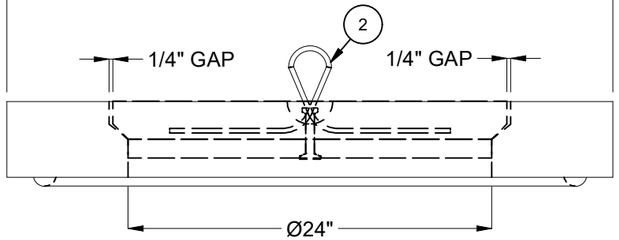

FRONT ELEVATION

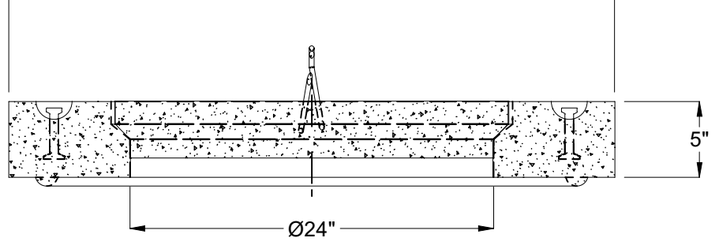

SECTION B-B

LIFTING NOTES
■ INSTALLATION: THIS CONCRETE PRODUCT IS DESIGNED TO BE LIFTED AT 5500 PSI WITH 2 LIFT CONNECTIONS EQUALLY LOADED TO 2 LIFTING POINTS AT A MINIMUM 60° SLING ANGLE, MEASURED FROM HORIZONTAL.
■ DEMOLDING: THIS CONCRETE PRODUCT IS DESIGNED TO BE LIFTED AT 2500 PSI WITH 2 LIFT CONNECTIONS EQUALLY LOADED TO 2 LIFTING POINTS AT A MINIMUM 60° SLING ANGLE, MEASURED FROM HORIZONTAL.
*All rigging shall be design by a qualified professional. Loading diagrams show illustrations of possible rigging setups to achieve the required sling angle and load leg equalization. Other valid rigging configurations are possible. A qualified professional must be consulted prior to lifting.

RIGGING DIAGRAMS*			
INSTALLATION	F	DEMOLDING	F
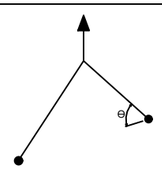		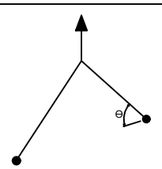	

REVISION HISTORY			
REV	DESCRIPTION	DATE	APPROVED
C-1	REVISED CABLE ANCHOR LENGTH	4/15/2024	

BURY DEPTH:	1.1' - 6.0' to Top		
WATER LEVEL:	Below Structure	WEIGHT:	499.8 Lbs
DESIGN SPEC:	ASTM C478	LOADING SPEC:	A-16 (AASHTO HS20-44)
REINFORCEMENT TYPE:	Rebar	LIFTING TYPE:	Dogbone

JENSEN PRECAST EST. 1968

WWW.JENSENPRECAST.COM

©2024 Jensen Precast- All rights reserved.
All materials appearing as Jensen Precast documents and the like are proprietary work product and are protected under U.S. copyright and other laws.
Unless in conjunction with business conducted with Jensen Precast, any use of Jensen Precast work product without express, written consent is prohibited, and recipient is prohibited from distributing any and all work product to non-approved third parties under penalty of civil action.

DESCRIPTION:	DISTRIBUTION D3040X05 TOP SLAB W/ PLUG TRF D24-D30C CASTING LAYOUT		REV: C-1
PART NUMBER:	100012037	DRAWN BY:	S. Woods
CREATED:	3/14/2023	MODIFIED:	4/15/2024
			SHEET: 1 OF 1

100012037.idw