DESIGN NOTES
■ ALL PARTS TO BE STENCILED: MFG DATE / PRODUCT ID / WEIGHT.

BILL OF MATERIALS

ITEM	UNIT QTY	QTY	PART NUMBER	DESCRIPTION
1	12.068 ft^3	12.068 ft^3	100005993	CONCRETE 5500 PSI DRYCAST
2	1	14	100003020	CONNECTOR PIPE SEAL BOOT 2IN 3IN 4IN TEAR OUT POLY I
3	1	3	100002867	ANCHOR DOGBONE P52 2T X 3-3/8" GALV
4	1	1	100017830	REINFORCING MAT 100017830

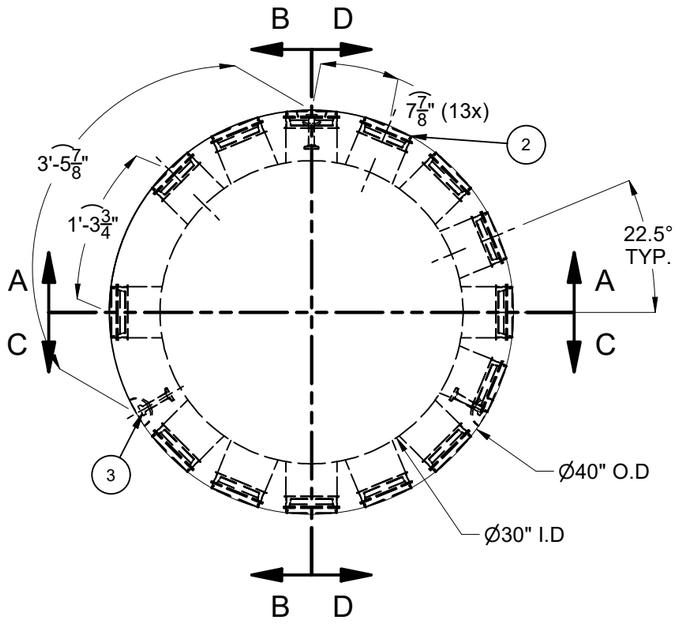

PLAN VIEW

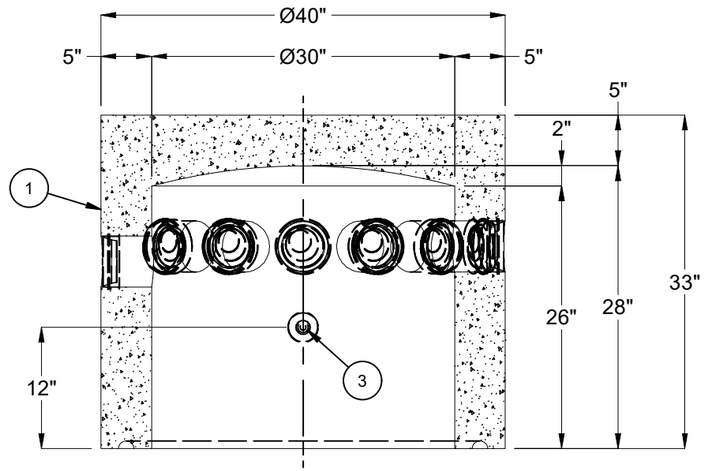

SECTION A-A

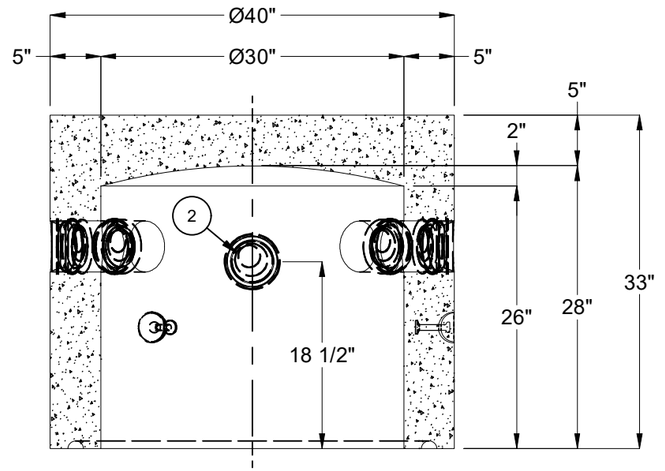

SECTION B-B

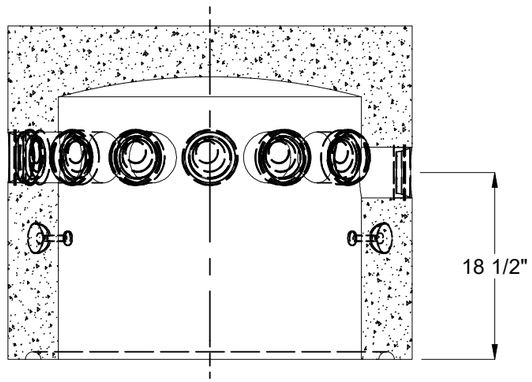

SECTION C-C

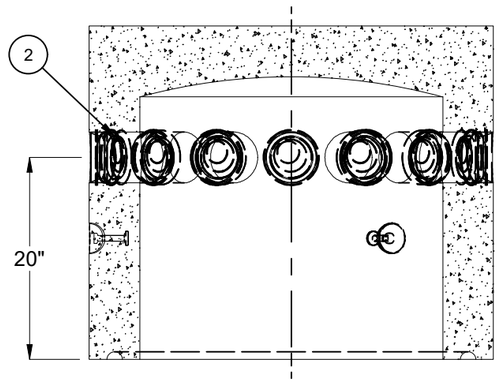

SECTION D-D

LIFTING NOTES
■ INSTALLATION: THIS CONCRETE PRODUCT IS DESIGNED TO BE LIFTED AT 5500 PSI WITH 3 LIFT CONNECTIONS EQUALLY LOADED TO 3 LIFTING POINTS AT A MINIMUM 60° SLING ANGLE, MEASURED FROM HORIZONTAL.
■ DEMOLDING: THIS CONCRETE PRODUCT IS DESIGNED TO BE LIFTED AT 2500 PSI WITH 3 LIFT CONNECTIONS EQUALLY LOADED TO 3 LIFTING POINTS AT A MINIMUM 60° SLING ANGLE, MEASURED FROM HORIZONTAL.
*All rigging shall be design by a qualified professional. Loading diagrams show illustrations of possible rigging setups to achieve the required sling angle and load leg equalization. Other valid rigging configurations are possible. A qualified professional must be consulted prior to lifting.

RIGGING DIAGRAMS*			
INSTALLATION	A	DEMOLDING	A
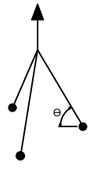		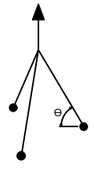	

REVISION HISTORY			
REV	DESCRIPTION	DATE	APPROVED
D-1	REV'D INLET SEAL BOOT LOCATION	2/13/2026	

BURY DEPTH:	0.0' - 12.4' to Top		
WATER LEVEL:	Below Structure	APPROX. WEIGHT:	1822.51 Lbs
DESIGN SPEC:	ACI 318,ASTM C857,ASTM C890	LOADING SPEC:	A-16 (AASHTO HS20-44)
REINFORCEMENT TYPE:	Rebar	LIFTING TYPE:	Dogbone

Infrastructure
JENSEN
WWW.JENSENINFRASTRUCTURE.COM

©2026 Jensen Infrastructure - All rights reserved.
All materials appearing as Jensen Infrastructure documents and the like are proprietary work product and are protected under U.S. copyright and other laws.
Unless in conjunction with business conducted with Jensen Infrastructure , any use of Jensen Infrastructure work product without express, written consent is prohibited, and recipient is prohibited from distributing any and all work product to non-approved third parties under penalty of civil action.
This product shall only be produced in a Jensen Infrastructure facility.

DESCRIPTION:	Distribution Box D3040x28 Rnd. Bottom Section Boot CASTING DRAWING		REV: D-1
PART NUMBER:	100012036	DRAWN BY:	S. Woods
CREATED:	3/14/2023	MODIFIED:	2/13/2026
			SHEET: 1 OF 1

100012036.idw