DESIGN NOTES
■ DESIGNED IN ACCORDANCE WITH AASHTO HS20-44 TRAFFIC BRIDGE LOADING USING 5,500 PSI COMPRESSIVE STRENGTH CONCRETE AND 60,000 PSI YIELD STRENGTH ASTM A-706 STEEL REINFORCEMENT PER CALCS. #31654.
■ MINIMUM EXCAVATION SIZE: 5'-10" X 8'-10" X DEPTH REQ'D.
■ COVER DESIGN FOR PARKWAY LOADING (300 PSF).
■ VAULT TO BE PLACED ON A MIN. 6" BASE OF CRUSHER RUN FOR EASE OF INSTALLATION AND EVEN LOAD DISTRIBUTION.
■ ALL PARTS TO BE STENCILED: MFG DATE / JOB NUMBER / PRODUCT ID / WEIGHT.
■ FOR COMPLETE DESIGN AND PRODUCT INFORMATION CONTACT JENSEN PRECAST.

OPTIONAL TEMP COVER:
100009894 - DOOR 96120 STEEL DROP-IN DP PNT TEMP ED

BILL OF MATERIALS

ITEM	UNIT QTY	QTY	PART NUMBER	DESCRIPTION	MASS (lb)
1	1	1	100012769	Vault 4884x42 Rect. Bottom Section Knockout CITY OF GLENDALE	5999
2	1	1	100012733	Pad 96120x8 30"x48"E Glendale CA S-1403-01	6437
3	1.000 ul	1.000 ul	100005749	SEALANT JOINT BUTYL RUBBER ASTM C-990 AND M198 CS-102 1IN EQUIV X14.5FT PER BOX 118FT	
4	1	1	100007044	COVER 3048 POLYMER C OF G ELECTRIC	190
5	1	6	100008105	PENTA BOLT 1/2-13 UNC 2-1/2 304SS W/CAPWASH	

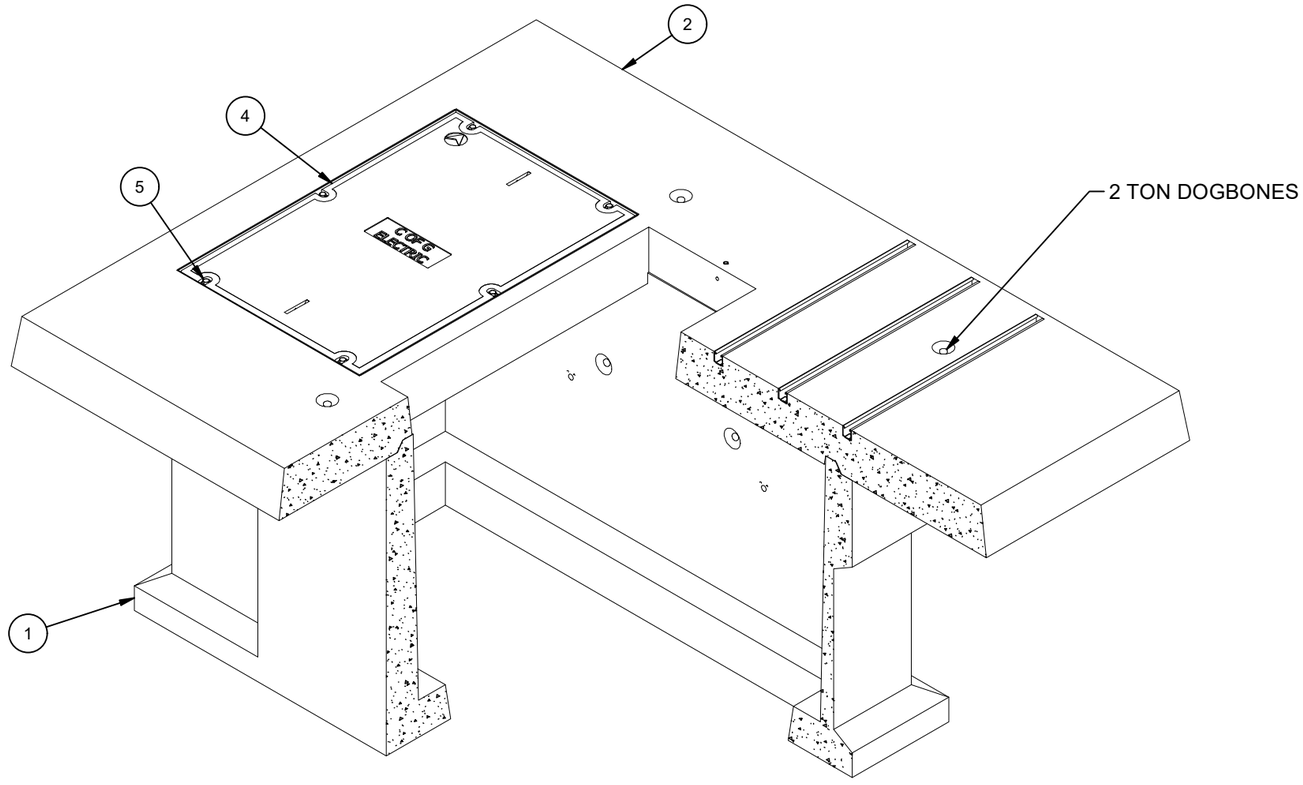

ISO VIEW

LIFTING NOTES
■ FIELD INSTALLATION: PLANT DEMOLDING: MINIMUM HANDLING CONCRETE STRENGTH F'c = 5500 PSI RIGGING EQUALIZER REQUIRED TO EQUALIZE LOAD TO 4 LIFTING POINTS WITH A SLING ANGLE BETWEEN 60° AND 90°

BURY DEPTH:	0.3' - 0.3' to Top		
WATER LEVEL:	Below Structure	APPROX. WEIGHT:	12626.81 Lbs
DESIGN SPEC:	ACI 318,ASTM C857	LOADING SPEC:	A-16 (AASHTO HS20-44)
AGENCY:	Glendale CA	AGENCY SPEC:	S-1403-1

JENSEN PRECAST EST. 1968
WWW.JENSENPRECAST.COM

©2023 Jensen Precast- All rights reserved.
All materials appearing as Jensen Precast documents and the like are proprietary work product and are protected under U.S. copyright and other laws.
Unless in conjunction with business conducted with Jensen Precast, any use of Jensen Precast work product without express, written consent is prohibited, and recipient is prohibited from distributing any and all work product to non-approved third parties under penalty of civil action.

REVISION HISTORY			
REV	DESCRIPTION	DATE	APPROVED
C-1	UPDATED PAD UNISTRUT TO EACH QTY.	8/15/2023	

DESCRIPTION: Slab Box Layout 96120x42 Knockout 30"x48"E Glendale CA S-1403-1 LAYOUT REVIEW			REV: C-1
PART NUMBER:	100010601	DRAWN BY: M. Zaragoza	SHEET: 1 OF 2
CREATED:	11/14/2022	MODIFIED: 8/15/2023	

100010601.idw

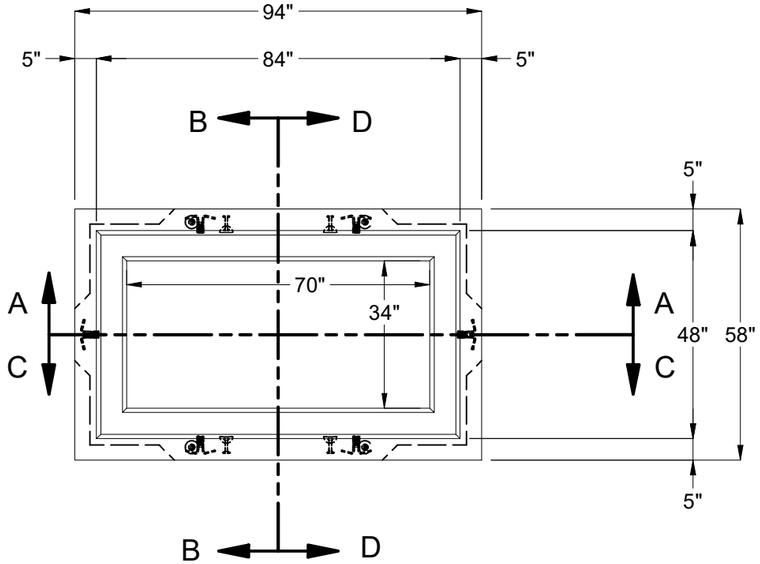

PLAN VIEW W/O EQUIPMENT PAD

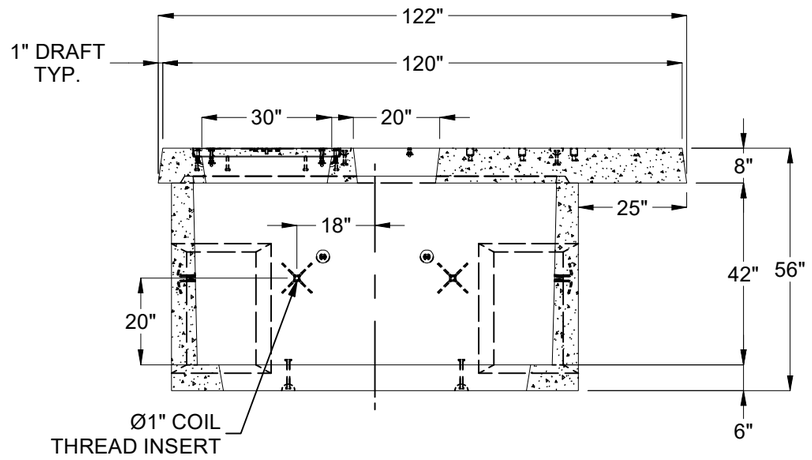

SECTION A-A

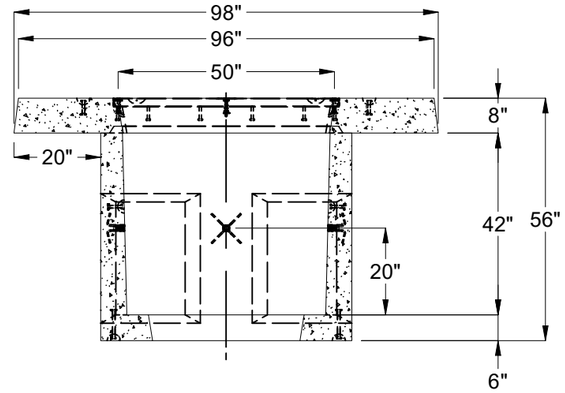

SECTION B-B

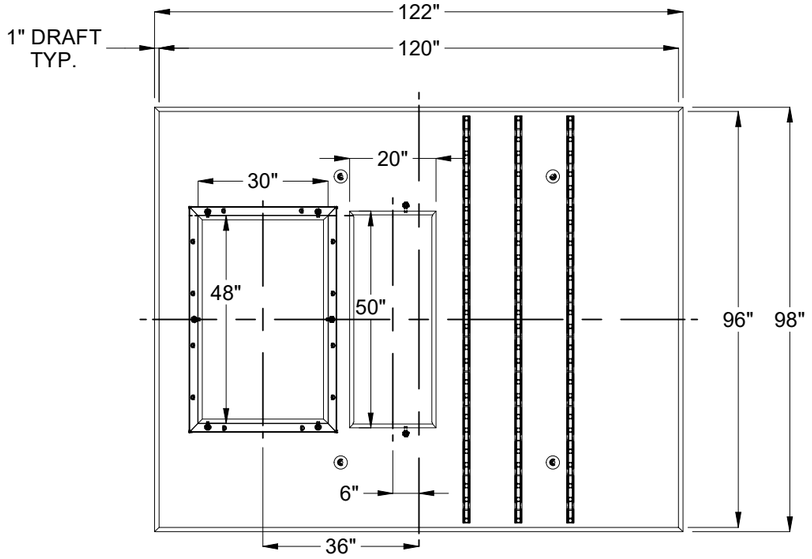

PLAN VIEW OF EQUIPMENT PAD

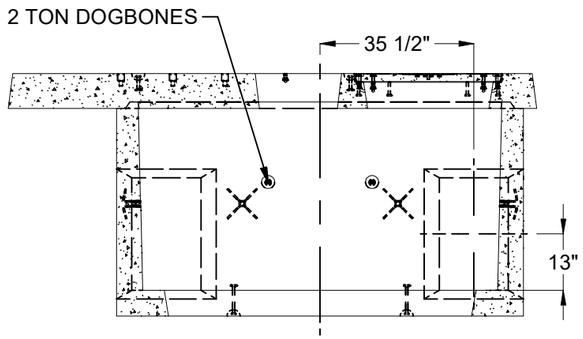

SECTION C-C

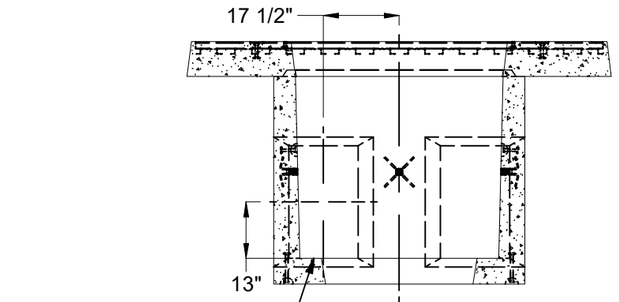

SECTION D-D

BURY DEPTH:	0.3' - 0.3' to Top		
WATER LEVEL:	Below Structure	APPROX. WEIGHT:	12626.81 Lbs
DESIGN SPEC:	ACI 318,ASTM C857	LOADING SPEC:	A-16 (AASHTO HS20-44)
AGENCY:	Glendale CA	AGENCY SPEC:	S-1403-1

JENSEN PRECAST EST. 1968

WWW.JENSENPRECAST.COM

©2023 Jensen Precast- All rights reserved.
All materials appearing as Jensen Precast documents and the like are proprietary work product and are protected under U.S. copyright and other laws.
Unless in conjunction with business conducted with Jensen Precast, any use of Jensen Precast work product without express, written consent is prohibited, and recipient is prohibited from distributing any and all work product to non-approved third parties under penalty of civil action.

DESCRIPTION:	Slab Box Layout 96120x42 Knockout 30"x48"E Glendale CA S-1403-1 LAYOUT REVIEW		REV: C-1
PART NUMBER:	100010601	DRAWN BY:	M. Zaragoza
CREATED:	11/14/2022	MODIFIED:	8/15/2023
			SHEET: 2 OF 2

100010601.idw